GMC

2018

Terrain/Terrain Denali Owner's Manual

gmc.com (U.S.)
gmccanada.ca (Canada)

Contents

Introduction 2
In Brief 5
Keys, Doors, and Windows 28
Seats and Restraints 55
Storage 106
Instruments and Controls 110
Lighting 151
Infotainment System 159
Climate Controls 160
Driving and Operating 168
Vehicle Care 259
Service and Maintenance 351
Technical Data 365
Customer Information 369
Reporting Safety Defects 379
OnStar 383
Index 395

Introduction

The names, logos, emblems, slogans, vehicle model names, and vehicle body designs appearing in this manual including, but not limited to, GM, the GM logo, GMC, the GMC Truck Emblem, TERRAIN, and DENALI are trademarks and/or service marks of General Motors LLC, its subsidiaries, affiliates, or licensors.

For vehicles first sold in Canada, substitute the name “General Motors of Canada Company” for GMC Motor Division wherever it appears in this manual.

This manual describes features that may or may not be on the vehicle because of optional equipment that was not purchased on the vehicle, model variants, country specifications, features/applications that may not be available in your region, or changes subsequent to the printing of this owner’s manual.

Refer to the purchase documentation relating to your specific vehicle to confirm the features.

Keep this manual in the vehicle for quick reference.

Canadian Vehicle Owners

A French language manual can be obtained from your dealer, at www.helminc.com, or from:

Propriétaires Canadiens

On peut obtenir un exemplaire de ce guide en français auprès du concessionnaire ou à l'adresse suivante:

Helm, Incorporated
Attention: Customer Service
47911 Halyard Drive
Plymouth, MI 48170
USA

Using this Manual

To quickly locate information about the vehicle, use the Index in the back of the manual. It is an alphabetical list of what is in the manual and the page number where it can be found.

About Driving the Vehicle

As with other vehicles of this type, failure to operate this vehicle correctly may result in loss of control or an accident. Be sure to read the driving guidelines in this manual in the section called “Driving and Operating” and specifically *Driver Behavior* ⇨ *169*, *Driving Environment* ⇨ *170*, and *Vehicle Design* ⇨ *170*.

Litho in U.S.A.
Part No. 23194369 B Second Printing

©2017 General Motors LLC. All Rights Reserved.

Danger, Warning, and Caution

Warning messages found on vehicle labels and in this manual describe hazards and what to do to avoid or reduce them.

⚠ Danger
Danger indicates a hazard with a high level of risk which will result in serious injury or death.

⚠ Warning
Warning indicates a hazard that could result in injury or death.

Caution
Caution indicates a hazard that could result in property or vehicle damage.

A circle with a slash through it is a safety symbol which means “Do Not,” “Do not do this,” or “Do not let this happen.”

Symbols

The vehicle has components and labels that use symbols instead of text. Symbols are shown along with the text describing the operation or information relating to a specific component, control, message, gauge, or indicator.

: Shown when the owner’s manual has additional instructions or information.

: Shown when the service manual has additional instructions or information.

: Shown when there is more information on another page — “see page.”

Vehicle Symbol Chart

Here are some additional symbols that may be found on the vehicle and what they mean. See the features in this manual for information.

: Airbag Readiness Light

: Air Conditioning

: Antilock Brake System (ABS)

: Brake System Warning Light

: Charging System

: Cruise Control

: Do Not Puncture

: Do Not Service

: Engine Coolant Temperature

: Exterior Lamps

: Flame/Fire Prohibited

: Fuel Gauge

: Fuses

: Headlamp High/Low-Beam Changer

: ISOFIX/LATCH System Child Restraints

: Malfunction Indicator Lamp

: Oil Pressure

: Power

: Remote Vehicle Start

: Seat Belt Reminders

: Tire Pressure Monitor

: Traction Control/StabiliTrak

: Under Pressure

: Windshield Washer Fluid

In Brief

Instrument Panel

Instrument Panel 6

Initial Drive Information

Initial Drive Information 8
Stop/Start System 8
Remote Keyless Entry (RKE) System 8
Remote Vehicle Start 8
Door Locks 9
Liftgate 9
Windows 10
Seat Adjustment 11
Memory Features 13
Heated and Ventilated Seats . . . 13
Head Restraint Adjustment 14
Seat Belts 14
Passenger Sensing System . . . 14
Mirror Adjustment 15
Steering Wheel Adjustment 15
Interior Lighting 16
Exterior Lighting 16
Windshield Wiper/Washer 17
Climate Controls 18
Transmission 19

Vehicle Features

Infotainment System 20
Steering Wheel Controls 20
Cruise Control 20
Driver Information Center (DIC) 20
Forward Collision Alert (FCA) System 21
Forward Automatic Braking (FAB) 21
Lane Keep Assist (LKA) 21
Lane Change Alert (LCA) 21
Surround Vision 22
Rear Vision Camera (RVC) 22
Rear Cross Traffic Alert (RCTA) System 22
Parking Assist 22
Automatic Parking Assist (APA) 22
Power Outlets 22
Universal Remote System 23
Sunroof 23

Performance and Maintenance

Traction Control/Electronic Stability Control 24
Tire Pressure Monitor 24
Fuel (LYX - 1.5L L4 Turbo Engine) 25
Fuel (LTG - 2.0L L4 Turbo Engine) 25
Fuel (Diesel) 25
E85 or FlexFuel 25
Engine Oil Life System 25
Driving for Better Fuel Economy 26
Diesel Particulate Filter 26
Diesel Exhaust Fluid 27
Roadside Assistance Program 27

Instrument Panel

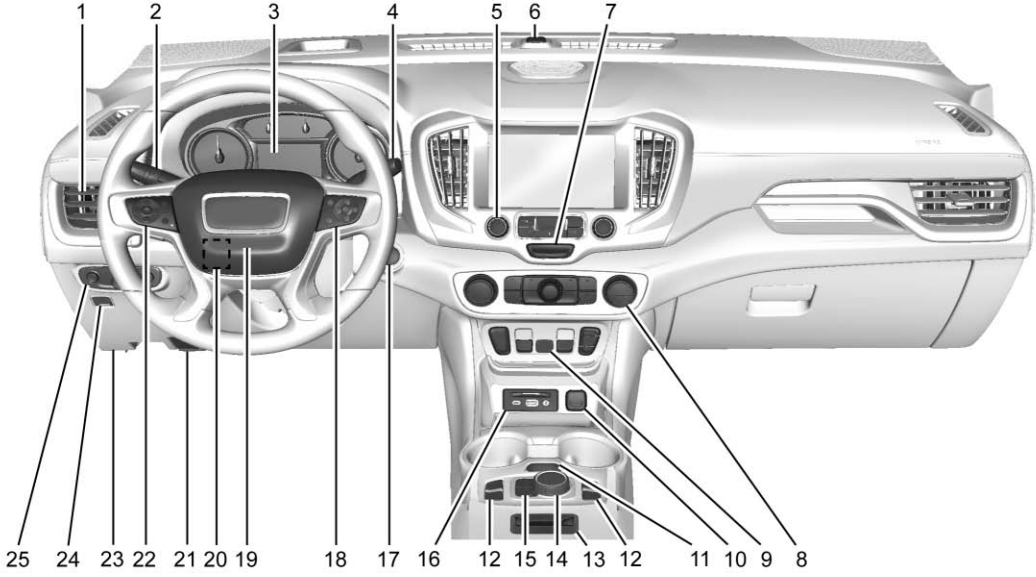

1. *Air Vents* ⇨ *165*.
2. Turn Signal Lever. See *Turn and Lane-Change Signals* ⇨ *155*.

   IntelliBeam System Button (If Equipped). See *Exterior Lamp Controls* ⇨ *151*.
3. *Instrument Cluster* ⇨ *119*.

   Driver Information Center (DIC) Display. See *Driver Information Center (DIC)* ⇨ *136*.
4. *Windshield Wiper/Washer* ⇨ *111*.
5. *Infotainment* ⇨ *159*.
6. Light Sensor. See *Automatic Headlamp System* ⇨ *154*.
7. *Hazard Warning Flashers* ⇨ *154*.
8. *Climate Control Systems* ⇨ *160* (If Equipped).

   Dual Automatic Climate Control System ⇨ *162* (If Equipped).
9. Front Shift Console. See *Automatic Transmission* ⇨ *204*.
10. *Power Outlets* ⇨ *114*.
11. *Assistance Systems for Parking or Backing* ⇨ *223* (If Equipped).
12. *Heated and Ventilated Front Seats* ⇨ *63* (If Equipped).
13. *Wireless Charging* ⇨ *115* (If Equipped).
14. *Driver Mode Control* ⇨ *216* (If Equipped).
15. *Lane Keep Assist (LKA)* ⇨ *234* (If Equipped).

    Hill Descent Control (HDC) ⇨ *216* (If Equipped).
16. USB Port. See the infotainment manual.

    Auxiliary Jack. See the infotainment manual.
17. ENGINE START/STOP Button. See *Ignition Positions* ⇨ *186*.
18. Steering Wheel Controls. See the infotainment manual.
19. *Horn* ⇨ *111*.
20. *Steering Wheel Adjustment* ⇨ *111* (Out of View).
21. Hood Release. See *Hood* ⇨ *262*.
22. *Cruise Control* ⇨ *220*.

    Heated Steering Wheel ⇨ *111* (If Equipped).

    Forward Collision Alert (FCA) System ⇨ *228* (If Equipped).
23. Data Link Connector (DLC) (Out of View). See *Malfunction Indicator Lamp (Check Engine Light)* ⇨ *127*.
24. *Electric Parking Brake* ⇨ *210*.
25. *Exterior Lamp Controls* ⇨ *151*.

    Instrument Panel Illumination Control ⇨ *156*.

    Fog Lamps ⇨ *155* (If Equipped).

Initial Drive Information

This section provides a brief overview about some of the important features that may or may not be on your specific vehicle.

For more detailed information, refer to each of the features which can be found later in this owner's manual.

Stop/Start System

The vehicle may have a fuel saving Stop/Start system to shut off the engine and help conserve fuel.

When the brakes are applied and the vehicle is at a complete stop, the engine may turn off. When the brake pedal is released or the accelerator pedal is pushed, the engine will restart. The engine may restart even while the brake is applied. See *Starting the Engine* ⇨ *188*.

Remote Keyless Entry (RKE) System

The Remote Keyless Entry (RKE) transmitter may be used to lock and unlock the doors from up to 60 m (197 ft) away from the vehicle.

With Remote Start Shown

Press the key release button near the bottom of the transmitter to remove the key. The key can be used for the driver door.

: Press to lock all doors.

: Press to unlock the driver door or all doors depending on the vehicle personalization settings.

Lock and unlock feedback can be personalized.

See *Vehicle Personalization* ⇨ *142*.

: Press and release one time to initiate vehicle locator.

Press and hold for three seconds to sound the panic alarm. Press again to cancel the panic alarm.

: Press twice quickly to open or close the liftgate. Press once to stop the liftgate from moving.

See *Keys* ⇨ *28* and *Remote Keyless Entry (RKE) System Operation* ⇨ *29*.

Remote Vehicle Start

If equipped, the engine can be started from outside of the vehicle.

Starting the Vehicle

1. Press and release on the RKE transmitter.
2. Immediately press and hold for at least four seconds or until the turn signal lamps flash.

When the vehicle starts, the parking lamps will turn on.

Remote start can be extended.

Start the vehicle normally after entering.

Canceling a Remote Start

To cancel a remote start, do one of the following:

- Press and hold until the parking lamps turn off.
- Turn on the hazard warning flashers.
- Turn the vehicle on and then off.

See *Remote Vehicle Start* ⇨ *35*.

Door Locks

To lock or unlock the vehicle from the outside, press or on the Remote Keyless Entry (RKE) transmitter.

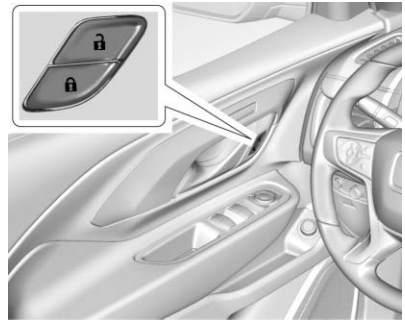

: Press to lock the doors.

: Press to unlock the doors.

See *Door Locks* ⇨ *37*.

To manually unlock a door from inside the vehicle, pull once on the door handle to unlock it, and a second time to open it.

Keyless Access

Press the button on the driver door when the RKE transmitter is within 1 m (3 ft). When unlocking from the driver door, the first press unlocks that door; press again within five seconds to unlock all passenger doors. See *Remote Keyless Entry (RKE) System Operation* ⇨ *29*.

Liftgate

Manual Liftgate Operation

Unlock the vehicle before opening the liftgate.

To open the liftgate, press the touch pad on the bottom of the liftgate and lift up.

Do not press the touch pad while closing the liftgate. This may cause the liftgate to be unlatched.

Power Liftgate Operation

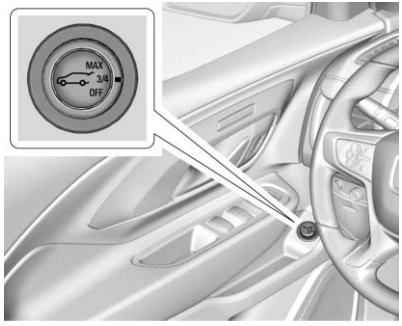

On vehicles with a power liftgate, the vehicle must be in P (Park) to use the power feature. The taillamps flash when the power liftgate moves.

Choose the power liftgate mode by turning the dial on the switch to either the 3/4 or MAX position.

Press to open or close the liftgate.

See *Liftgate* ⇨ *41*.

Hands-Free Liftgate

The liftgate will not operate if the RKE transmitter is not within 1 m (3 ft).

To operate, kick your foot straight up in one swift motion under the rear bumper between the left exhaust pipe and the license plate, then pull it back.

See *Liftgate* ⇨ *41*.

Windows

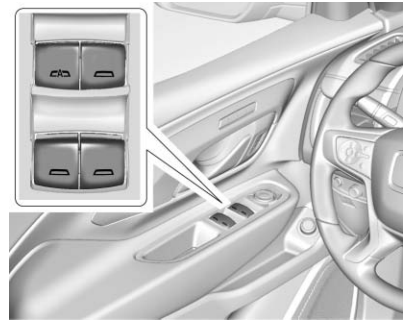

The power windows work when the ignition is on, in ACC/ACCESSORY, or when Retained Accessory Power (RAP) is active.

Using the window switch, press to open or pull to close the window.

The windows may be temporarily disabled if they are used repeatedly within a short time.

Seat Adjustment

Manual Front Seats

To adjust a manual seat:

1. Pull the handle at the front of the seat.
2. Slide the seat to the desired position and release the handle.
3. Try to move the seat back and forth to be sure it is locked in place.

Seat Height Adjuster

Move the lever up or down to manually raise or lower the seat.

See *Seat Adjustment* ⇨ *58*.

Reclining Seatbacks

To recline the manual seatback:

1. Lift the lever.
2. Move the seatback to the desired position, then release the lever to lock the seatback in place.
3. Push and pull on the seatback to make sure it is locked.

To return the seatback to an upright position:

1. Lift the lever fully without applying pressure to the seatback, and the seatback returns to the upright position.
2. Push and pull on the seatback to make sure it is locked.

See *Reclining Seatbacks* ⇨ *59*.

Power Driver Seat

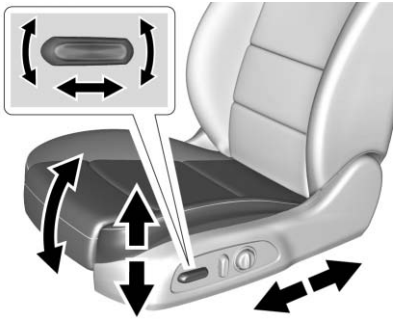

To adjust a power driver seat, if equipped:

- Move the seat forward or rearward by sliding the control forward or rearward.
- Raise or lower the front part of the seat cushion by moving the front of the control up or down.
- Raise or lower the entire seat by moving the rear of the control up or down.

See *Power Seat Adjustment* ⇨ *58*.

To recline a power seatback, if equipped:

- Tilt the top of the control rearward to recline.
- Tilt the top of the control forward to raise.

See *Reclining Seatbacks* ⇨ *59*.

Lumbar Adjustment

If equipped, press and hold the front or rear of the control to increase or decrease lumbar support.

See *Lumbar Adjustment* ⇨ *59*.

Memory Features

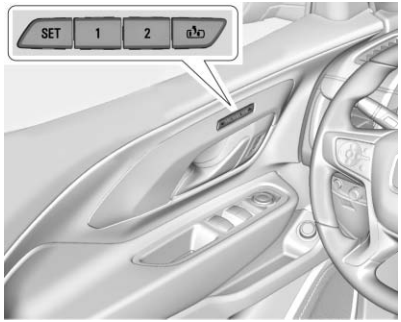

If equipped, memory seats allow two drivers to store and recall their unique seat positions for driving the vehicle, and a shared exit position for getting out of the vehicle. Other feature positions may also be set, such as power mirrors, if equipped. Memory positions are linked to RKE transmitter 1 or 2 for automatic memory recalls.

Before storing, adjust all available memory feature positions. Turn the ignition on and then press and release SET; a beep will sound. Then immediately press and hold 1, 2, or (Exit) on the driver door until two beeps sound. To manually recall these positions, press and hold 1, 2, or until the saved position is reached.

When Auto Memory Recall is enabled in vehicle personalization, positions previously stored to memory buttons 1 and 2 are recalled when the ignition is changed from off to on or ACC/ACCESSORY.

When Easy Exit Options is enabled in vehicle personalization, the feature automatically recalls the previously stored exit position when exiting the vehicle. See *Memory Seats* ⇨ *60*.

Heated and Ventilated Seats

If equipped, the buttons are on the center console. To operate, the engine must be running.

Press or , if equipped, to heat the driver or passenger seatback only.

Press or to heat the driver or passenger cushion and seatback.

Press or , if equipped, to ventilate the driver or passenger seat. A ventilated seat has a fan that pulls or pushes air through the seat. The air is not cooled.

Press the heated or ventilated button once for the highest setting. With each press of the button, the heated or ventilated seat will change to the next lower setting, and then to the off setting. The lights indicate three for the highest setting and one for the lowest.

See *Heated and Ventilated Front Seats* ⇨ *63*.

Head Restraint Adjustment

Do not drive until the head restraints for all occupants are installed and adjusted properly.

To achieve a comfortable seating position, change the seatback recline angle as little as necessary while keeping the seat and the head restraint height in the proper position.

See *Head Restraints* ⇨ *56* and *Seat Adjustment* ⇨ *58*.

Seat Belts

Refer to the following sections for important information on how to use seat belts properly:

- *Seat Belts* ⇨ *69*.
- *How to Wear Seat Belts Properly* ⇨ *70*.
- *Lap-Shoulder Belt* ⇨ *71*.
- *Lower Anchors and Tethers for Children (LATCH System)* ⇨ *95*.

Passenger Sensing System

The passenger sensing system turns off the front outboard passenger frontal airbag under certain conditions. No other airbag is affected by the passenger sensing system. See *Passenger Sensing System* ⇨ *82*.

The passenger airbag status indicator will light on the overhead console when the vehicle is started. See *Passenger Airbag Status Indicator* ⇨ *126*.

Mirror Adjustment

Exterior

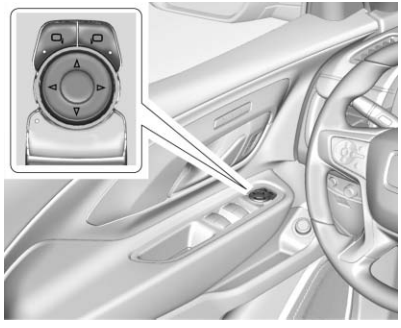

To adjust the mirrors:

1. Press ⧉ or ⧉ to choose the driver or passenger mirror.
2. Press the arrows on the control pad to move each mirror in the desired direction.

See *Power Mirrors* ⇨ *49*.

Interior

Adjustment

Adjust the rearview mirror to clearly view the area behind the vehicle.

Manual Rearview Mirror

For vehicles with a manual rearview mirror, push the tab forward for daytime use and pull it rearward for nighttime use to avoid the glare of the headlamps from behind. See *Manual Rearview Mirror* ⇨ *50*.

Automatic Dimming Rearview Mirror

Vehicles with an automatic dimming inside rearview mirror automatically reduce the glare of the headlamps from behind. The dimming feature comes on when the vehicle is started. See *Automatic Dimming Rearview Mirror* ⇨ *50*.

Steering Wheel Adjustment

To adjust the steering wheel:

1. Pull the lever down.
2. Move the steering wheel up or down.
3. Pull or push the steering wheel closer or away from you.
4. Pull the lever up to lock the steering wheel in place.

Do not adjust the steering wheel while driving.

Interior Lighting

Dome Lamps

The dome lamp controls are in the overhead console.

To operate, press the following buttons:

OFF : Press to turn off the dome lamps when a door is open. An indicator light on the button will turn on when the dome lamp override is activated. Press OFF again to deactivate this feature and the indicator light will turn off. The dome lamps will come on when doors are opened.

ON/OFF : Press to turn the dome lamps on manually.

Reading Lamps

There are reading lamps on the overhead console and over the rear passenger doors. These lamps come on when any door is opened.

Front Reading Lamps

The front reading lamps are in the overhead console.

Press the lamp lenses to turn the front reading lamps on or off.

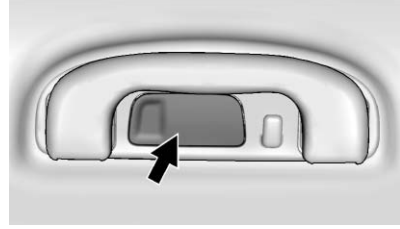

Rear Reading Lamps

Press the lamp lens to turn the rear passenger reading lamps on or off.

For more information on interior lighting, see *Instrument Panel Illumination Control* ⇨ *156*.

Exterior Lighting

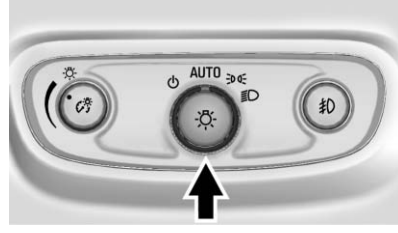

The exterior lamp control is on the instrument panel to the left of the steering column.

There are four positions.

⏻ **:** Turns the exterior lamps off and deactivates the AUTO mode. Turn to ⏻ again to reactivate the AUTO mode.

In Canada, the headlamps will automatically reactivate when the vehicle is shifted out of P (Park).

AUTO : Turns the exterior lamps on and off automatically depending on outside lighting.

: Turns on the parking lamps including all lamps, except the headlamps.

: Turns on the headlamps together with the parking lamps and instrument panel lights.

See:

- *Exterior Lamp Controls* ⇨ *151*
- *Daytime Running Lamps (DRL)* ⇨ *153*
- *Fog Lamps* ⇨ *155*

Windshield Wiper/Washer

The windshield wiper/washer lever is on the side of the steering column. With the ignition on or in ACC/ACCESSORY, move the windshield wiper lever to select the wiper speed.

HI : Use for fast wipes.

LO : Use for slow wipes.

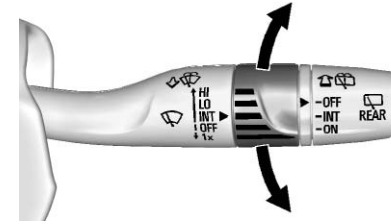

INT : Move the lever up to INT for intermittent wipes, then turn the band up for more frequent wipes or down for less frequent wipes.

OFF : Use to turn the wipers off.

1X : For a single wipe, briefly move the wiper lever down. For several wipes, hold the wiper lever down.

: Pull the windshield wiper lever toward you to spray windshield washer fluid and activate the wipers.

Rear Window Wiper/Washer

Turn the end of the windshield wiper lever to operate the rear window wiper/washer.

OFF : Turns the system off.

INT : Intermittent wipes.

ON : Slow wipes.

: Push the windshield wiper lever forward to spray washer fluid on the rear window. The lever automatically returns to its original position when released.

See *Windshield Wiper/Washer* ⇨ *111* and *Rear Window Wiper/Washer* ⇨ *112*.

Climate Controls

The vehicle's heating, cooling, defrosting, and ventilation can be controlled with these systems.

Climate Control System

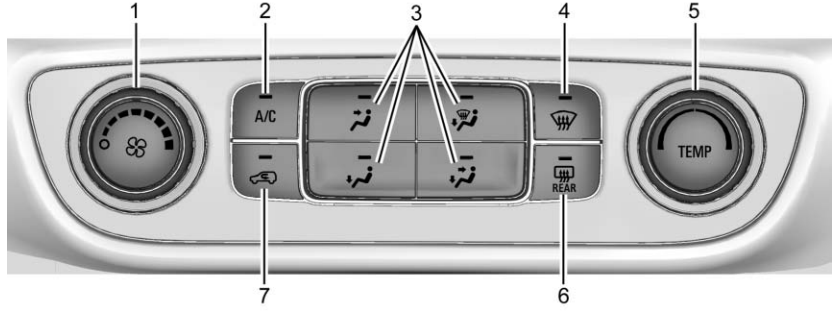

1. Fan Control
2. A/C (Air Conditioning)
3. Air Delivery Mode Controls
4. Defrost
5. TEMP (Temperature Control)
6. Rear Window Defogger
7. Air Recirculation

Dual Automatic Climate Control System

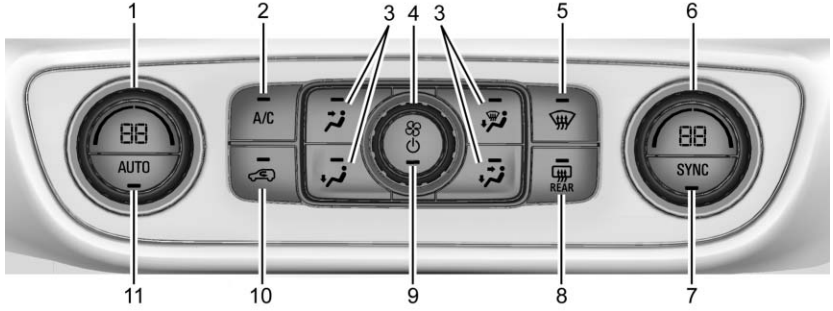

1. Driver Temperature Control
2. A/C (Air Conditioning)
3. Air Delivery Mode Controls
4. Fan Control
5. Defrost
6. Passenger Temperature Control
7. SYNC (Synchronized Temperature)
8. Rear Window Defogger
9. Power Button
10. Air Recirculation
11. AUTO (Automatic Operation)

See *Climate Control Systems* ⇨ *160* (If Equipped) or *Dual Automatic Climate Control System* ⇨ *162* (If Equipped).

Transmission

Electronic Range Select (ERS) Mode

ERS or manual mode allows for the selection of the range of gear positions. Use this mode when driving downhill to limit the top gear and vehicle speed. See *Manual Mode* ⇨ *208*.

To use this feature:

1. Press the L (Low) button.
2. Press the plus/minus button on the front shift console to increase or decrease the gear range available.

Vehicle Features

Infotainment System

See the infotainment manual for information on the radio, audio players, phone, navigation system, and voice or speech recognition. It also includes information on settings.

Steering Wheel Controls

The infotainment system can be operated by using the steering wheel controls. See "Steering Wheel Controls" in the infotainment manual.

Cruise Control

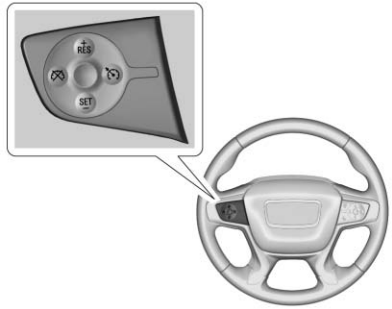

: Press to turn the cruise control system on and off. A white indicator comes on in the instrument cluster when cruise is turned on.

: Press to disengage cruise control without erasing the set speed from memory.

+RES : If there is a set speed in memory, press to resume that speed or press and hold to accelerate. If cruise control is already active, use to increase vehicle speed.

−SET : Press briefly to set the speed and activate cruise control. If cruise control is already active, use to decrease vehicle speed.

See *Cruise Control* ⇨ *220*.

Driver Information Center (DIC)

The DIC display is in the instrument cluster. It shows the status of many vehicle systems.

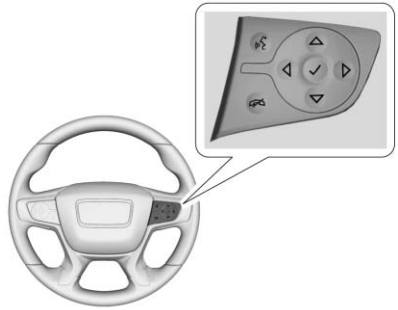

△ or ▽ : Press to move up or down in a list.

◁ **or** ▷ **:** Press to move between the interactive display zones in the cluster.

✓ **:** Press to open a menu or select a menu item. Press and hold to reset values on certain screens.

See *Driver Information Center (DIC)* ⇨ *136*.

Forward Collision Alert (FCA) System

If equipped, FCA may help avoid or reduce the harm caused by front-end crashes. FCA provides a green indicator, 🚗, when a vehicle is detected ahead. This indicator displays amber if you follow a vehicle too closely. When approaching a vehicle ahead too quickly, FCA provides a flashing red alert on the windshield and rapidly beeps or pulses the driver seat.

See *Forward Collision Alert (FCA) System* ⇨ *228*.

Forward Automatic Braking (FAB)

If the vehicle has Forward Collision Alert (FCA), it also has FAB, which includes Intelligent Brake Assist (IBA). When the system detects a vehicle ahead in your path that is traveling in the same direction that you may be about to crash into, it can provide a boost to braking or automatically brake the vehicle. This can help avoid or lessen the severity of crashes when driving in a forward gear.

See *Forward Automatic Braking (FAB)* ⇨ *231*.

Lane Keep Assist (LKA)

If equipped, LKA may help avoid crashes due to unintentional lane departures. It may assist by gently turning the steering wheel if the vehicle approaches a detected lane marking without using a turn signal in that direction. It may also provide a Lane Departure Warning (LDW) alert as the lane marking is crossed. The system will not assist or alert if it detects that you are actively steering. Override LKA by turning the steering wheel. LKA uses a camera to detect lane markings between 60 km/h (37 mph) and 180 km/h (112 mph).

See *Lane Departure Warning (LDW)* ⇨ *234* and *Lane Keep Assist (LKA)* ⇨ *234*.

Lane Change Alert (LCA)

If equipped, the LCA system is a lane-changing aid that assists drivers with avoiding lane change crashes that occur with moving vehicles in the side blind zone (or spot) areas or with vehicles rapidly approaching these areas from behind. The LCA warning display will light up in the corresponding outside mirror and will flash if the turn signal is on. The Side Blind Zone Alert (SBZA) system is included as part of the LCA system.

See *Side Blind Zone Alert (SBZA)* ⇨ *232* and *Lane Change Alert (LCA)* ⇨ *232*.

Surround Vision

If equipped, views around the vehicle appear in the infotainment display to aid with parking and low-speed maneuvers.

See “Surround Vision” under *Assistance Systems for Parking or Backing* ⇨ *223*.

Front Vision Camera

If equipped, a view of the area in front of the vehicle appears on the infotainment display to aid with parking and low-speed maneuvers.

See “Front Vision Camera” under *Assistance Systems for Parking or Backing* ⇨ *223*.

Rear Vision Camera (RVC)

The RVC displays a view of the area behind the vehicle on the infotainment display when the vehicle is shifted into R (Reverse) to aid with parking and low-speed backing maneuvers.

See *Assistance Systems for Parking or Backing* ⇨ *223*.

Rear Cross Traffic Alert (RCTA) System

If equipped, the RCTA system shows a triangle with an arrow on the infotainment display to warn of traffic behind your vehicle that may cross your vehicle's path while in R (Reverse). In addition, beeps will sound, or the driver seat will pulse.

See *Assistance Systems for Parking or Backing* ⇨ *223*.

Parking Assist

If equipped, Rear Parking Assist (RPA) uses sensors on the rear bumper to assist with parking and avoiding objects while in R (Reverse). It operates at speeds less than 8 km/h (5 mph). RPA may show a warning triangle on the infotainment display and a graphic on the instrument cluster to provide the object distance. In addition, multiple beeps or seat pulses may occur if very close to an object.

The vehicle may also have the Front Parking Assist system.

See *Assistance Systems for Parking or Backing* ⇨ *223*.

Automatic Parking Assist (APA)

If equipped, the APA system helps to search for and maneuver the vehicle into parallel or perpendicular parking spots using automatic steering, DIC displays, and beeps. When the vehicle speed is below 30 km/h (18 mph), press P to enable the system.

See “Automatic Parking Assist (APA)” under *Assistance Systems for Parking or Backing* ⇨ *223*.

Power Outlets

The vehicle has two 12-volt accessory power outlets, which can be used to plug in electrical equipment, such as a cell phone or MP3 player.

There are power outlets:

- On the center stack below the climate control system.
- In the rear cargo area.

To use the outlet, remove the cover.

See *Power Outlets* ⇨ *114*.

Universal Remote System

If equipped, the Universal Remote System allows for garage door openers, security systems, and home automation devices to be programmed to work with these buttons in the vehicle.

See *Universal Remote System* ⇨ *147*.

Sunroof

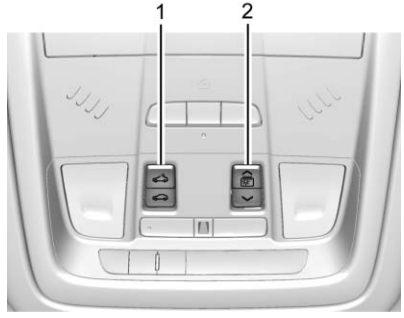

1. Sunroof Switch
2. Sunshade Switch

If equipped, the sunroof only operates when the ignition is on or in ACC/ACCESSORY, or when Retained Accessory Power (RAP) is active. See *Retained Accessory Power (RAP)* ⇨ *192*.

Sunroof Switch

Express-Open/Express-Close : To express-open the sunroof, fully press and release (1). Press the switch again to stop it. To express-close the sunroof, fully press and release (1). Press the switch again to stop it.

Open/Close (Manual Mode) : To open the sunroof, press and hold (1) until the sunroof reaches the desired position. Press and hold (1) to close it.

Comfort Stop : The sunroof has a comfort stop feature that stops the sunroof from opening fully. Press and release the rear of to open the sunroof to the comfort open position. Pressing the rear of again will open the sunroof fully. If the sunshade is not fully open when the comfort stop feature is pressed the second time, the sunshade will open fully.

Vent : From the closed position, press (1) to vent the sunroof.

Sunshade Switch

Express-open/Express-close : To express-open the sunshade, fully press and release (2). To express-close the sunshade, fully press and release (2) . Press the switch again to stop it.

Open/Close : To open the sunshade, press and hold (2) until the sunshade reaches the desired position.

When the sunroof is opened, an air deflector will automatically raise. The air deflector will retract when the sunroof is closed.

Performance and Maintenance

Traction Control/ Electronic Stability Control

The Traction Control System (TCS) limits wheel slip. The system is on when the vehicle is started.

The StabiliTrak system assists with directional control of the vehicle in difficult driving conditions. The system is on when the vehicle is started.

TCS and StabiliTrak can be turned off or on using the Driver Information Center (DIC) controls. See *Traction Control/Electronic Stability Control* ⇨ *213*.

Tire Pressure Monitor

This vehicle may have a Tire Pressure Monitor System (TPMS).

The low tire pressure warning light alerts to a significant loss in pressure of one of the vehicle's tires. If the warning light comes on, stop as soon as possible and inflate the tires to the recommended pressure shown on the Tire and Loading Information label. See *Vehicle Load Limits* ⇨ *181*. The warning light will remain on until the tire pressure is corrected.

The low tire pressure warning light may come on in cool weather when the vehicle is first started, and then turn off as the vehicle is driven. This may be an early indicator that the tire pressures are getting low and the tires need to be inflated to the proper pressure.

The TPMS does not replace normal monthly tire maintenance. Maintain the correct tire pressures.

See *Tire Pressure Monitor System* ⇨ *309*.

Tire Fill Alert (If Equipped)

This feature provides visual and audible alerts outside the vehicle to help when inflating an underinflated tire to the recommended cold tire pressure. See “Tire Fill Alert (If Equipped)” under *Tire Pressure Monitor Operation* ⇨ *310*.

Fuel (LYX - 1.5L L4 Turbo Engine)

Regular Fuel

Use only unleaded gasoline rated 87 octane or higher in your vehicle. Do not use gasoline with an octane rating lower as it may result in vehicle damage and lower fuel economy. See *Fuel (Gasoline)* ⇨ *236*.

Fuel (LTG - 2.0L L4 Turbo Engine)

Premium Recommended Fuel

Use premium 93 octane unleaded gasoline in your vehicle. Unleaded gasoline with an octane rating as low as 87 may be used, but it will reduce performance and fuel economy. See *Fuel (Gasoline)* ⇨ *236*.

Fuel (Diesel)

Use of diesel fuel with ultra low sulfur content (15 ppm, maximum) is required. See *Fuel for Diesel Engines* ⇨ *238*.

E85 or FlexFuel

No E85 or FlexFuel

Gasoline-ethanol fuel blends greater than E15 (15% ethanol by volume), such as E85, cannot be used in this vehicle.

Engine Oil Life System

The engine oil life system calculates engine oil life based on vehicle use and displays the CHANGE ENGINE OIL SOON message when it is time to change the engine oil and filter. The oil life system should be reset to 100% only following an oil change.

Resetting the Oil Life System

1. Display REMAINING OIL LIFE on the DIC menu. See *Driver Information Center (DIC)* ⇨ *136*.

2. Press and hold ✓ for several seconds while the Oil Life display is active to reset the Oil Life system.
3. REMAINING OIL LIFE 100% will be displayed when the oil life system is successfully reset.

The oil life system can also be reset as follows:

1. Place the ignition in Service Mode. See *Ignition Positions* ⇨ *186*.
2. Display REMAINING OIL LIFE on the DIC menu. See *Driver Information Center (DIC)* ⇨ *136*.
3. Fully press and release the accelerator pedal three times within five seconds.
4. If the display changes to 100%, the system is reset.

See *Engine Oil Life System* ⇨ *273*.

Driving for Better Fuel Economy

Driving habits can affect fuel mileage. Here are some driving tips to get the best fuel economy possible.

- Avoid fast starts and accelerate smoothly.
- Brake gradually and avoid abrupt stops.
- Avoid idling the engine for long periods of time.
- When road and weather conditions are appropriate, use cruise control.
- Always follow posted speed limits or drive more slowly when conditions require.
- Keep vehicle tires properly inflated.
- Combine several trips into a single trip.
- Replace the vehicle's tires with the same TPC Spec number molded into the tire's sidewall near the size.
- Follow recommended scheduled maintenance.

Diesel Particulate Filter

The engine is equipped with a Diesel Particulate Filter (DPF) that will filter or trap particulates. The DPF is under the vehicle in the exhaust system.

Depending on a number of factors monitored by the engine computer, the DPF will need to be cleaned of accumulated solids. When a cleaning is needed, the engine computer will initiate a cleaning action by warming the exhaust gas temperature. This feature has been designed to operate automatically, with limited operator involvement or awareness.

Cleaning the DPF (Exhaust Filter)

While the DPF cleaning is automatically controlled by the engine computer, the vehicle will need to operate continuously for approximately 25 minutes and at

speeds greater than
50 km/h (30 mph) to clean the DPF effectively.

Special DPF Driver Messages

If the vehicle is used for numerous short trips or extended slow-speed operation, the engine computer may not be able to clean the DPF effectively. If this happens, a Driver Information Center (DIC) message will display.

If the vehicle continues to be driven in a manner that prevents effective DPF cleaning, the DPF will become plugged. If this occurs, the engine computer will turn on the malfunction indicator lamp in the instrument cluster and a DIC message will display. See *Diesel Particulate Filter* ⇨ *197*, *Fuel for Diesel Engines* ⇨ *238* and *Engine Oil* ⇨ *269*.

Diesel Exhaust Fluid

Diesel Exhaust Fluid (DEF) is used with diesel engines to reduce the amount of regulated emissions produced. The DEF system must be maintained for the vehicle to run properly. It is normal to hear the DEF system purge fluid back into the tank after the vehicle is shut off.

Locating Diesel Exhaust Fluid

DEF can be purchased at a GMC dealer. It can also be purchased at authorized vehicle dealerships. Additionally, some diesel fueling stations or retailers may have DEF. For vehicles with an active OnStar service plan, OnStar can help to locate a DEF retailer. See *Customer Assistance Offices* ⇨ *371* for phone numbers to assist you in contacting a GM dealer. See *Recommended Fluids and Lubricants* ⇨ *361*.

As the DEF tank becomes low on fluid, warnings begin with approximately 1 600 km (1,000 mi) of remaining range. These warnings will increase in intensity as the tank becomes empty. Once the tank is empty, the vehicle speed will be limited. If there is an issue with the quality of the fluid or the exhaust fluid system, warnings will be displayed in the Driver Information Center (DIC). See *Diesel Exhaust Fluid* ⇨ *198*.

Roadside Assistance Program

U.S.: 1-888-881-3302

TTY Users (U.S. Only):
1-888-889-2438

Canada: 1-800-268-6800

New GMC owners are automatically enrolled in the Roadside Assistance Program.

See *Roadside Assistance Program* ⇨ *373*.

Keys, Doors, and Windows

Keys and Locks
Keys 28
Remote Keyless Entry (RKE) System 29
Remote Keyless Entry (RKE) System Operation 29
Remote Vehicle Start 35
Door Locks 37
Power Door Locks 39
Delayed Locking 39
Automatic Door Locks 39
Lockout Protection 40
Safety Locks 40

Doors
Liftgate 41

Vehicle Security
Vehicle Security 46
Vehicle Alarm System 46
Immobilizer 47
Immobilizer Operation 48

Exterior Mirrors
Convex Mirrors 49
Power Mirrors 49
Folding Mirrors 49
Heated Mirrors 49
Automatic Dimming Mirror 50
Reverse Tilt Mirrors 50

Interior Mirrors
Interior Rearview Mirrors 50
Manual Rearview Mirror 50
Automatic Dimming Rearview Mirror 50

Windows
Windows 50
Power Windows 51
Sun Visors 52

Roof
Sunroof 53

Keys and Locks

Keys

⚠ Warning

Leaving children in a vehicle with a Remote Keyless Entry (RKE) transmitter is dangerous and children or others could be seriously injured or killed. They could operate the power windows or other controls or make the vehicle move. The windows will function with the RKE transmitter in the vehicle, and children or others could be caught in the path of a closing window. Do not leave children in a vehicle with an RKE transmitter.

The key, inside the Remote Keyless Entry (RKE) transmitter, is used for the driver door.

To remove the key, press the button near the bottom of the transmitter, and pull the key out. Never pull the key out without pressing the button.

If it becomes difficult to turn the key, inspect the key blade for debris.

See your dealer if a new key is needed.

Contact Roadside Assistance if locked out of the vehicle. See *Roadside Assistance Program* ⇨ *373*.

With an active OnStar service plan, an OnStar Advisor may remotely unlock the vehicle. See *OnStar Overview* ⇨ *383*.

Remote Keyless Entry (RKE) System

See *Radio Frequency Statement* ⇨ *379*.

If there is a decrease in the Remote Keyless Entry (RKE) operating range:

- Check the distance. The transmitter may be too far from the vehicle.
- Check the location. Other vehicles or objects may be blocking the signal.
- Check the transmitter's battery. See “Battery Replacement” later in this section.
- If the transmitter is still not working correctly, see your dealer or a qualified technician for service.

Remote Keyless Entry (RKE) System Operation

The Keyless Access system allows for vehicle entry when the transmitter is within 1 m (3 ft). See “Keyless Access Operation” following.

The RKE transmitter functions may work up to 60 m (197 ft) away from the vehicle.

Keep in mind that other conditions, such as those previously stated, can impact the performance of the transmitter.

With Remote Start Shown, Without Similar

: Press to lock all doors. The turn signal indicators may flash and/or the horn may sound on the second press to indicate locking. See *Vehicle Personalization* ⇨ *142*.

If the driver door is open when is pressed, all doors will lock and then the driver door will immediately unlock, if enabled through vehicle personalization. If the passenger door is open when is pressed, all doors lock.

Pressing may also arm the theft-deterrent system. See *Vehicle Alarm System* ⇨ *46*.

: Press to unlock the driver door. Press unlock again within five seconds to unlock all doors. The RKE transmitter can be programmed to unlock all doors on the first button press. See *Vehicle Personalization* ⇨ *142*. When remotely unlocking the vehicle at night the fog lamps and back-up lamps will come on for about 20 seconds to light your approach to the vehicle. The turn signal indicators may flash to indicate unlocking. See *Vehicle Personalization* ⇨ *142*.

Pressing will disarm the theft-deterrent system. See *Vehicle Alarm System* ⇨ *46*.

On some models, pressing and holding will open all of the windows, if enabled in vehicle personalization.

: If equipped, press and release and then immediately press and hold for at least four seconds to start the engine from outside the vehicle using the RKE transmitter. See *Remote Vehicle Start* ⇨ *35*.

: Press and release one time to initiate vehicle locator. The exterior lamps flash and the horn chirps three times. Press and hold for three seconds to sound the panic alarm. The horn sounds and the turn signal lamps flash for 30 seconds, or until is pressed again or the vehicle is started.

: Press twice quickly to open or close the liftgate.

Press once to stop the liftgate from moving.

Keyless Access Operation

With the Keyless Access system, you can lock and unlock the doors and access the liftgate without removing the RKE transmitter from your pocket, purse, briefcase, etc. The RKE transmitter should be within 1 m (3 ft) of the liftgate or door being opened.

Keyless Access can be programmed to unlock all doors on the first lock/unlock press from the driver door. See *Vehicle Personalization* ⇨ *142*.

If equipped with memory seats, RKE transmitters 1 and 2 are linked to the seating positions of memory 1 or 2. See *Memory Seats* ⇨ *60*.

Keyless Unlocking/Locking from the Driver Door

When the doors are locked and the RKE transmitter is within 1 m (3 ft) of the driver door handle, pressing the lock/unlock button on the driver door handle will unlock the driver door. If the lock/unlock button is pressed again within five seconds, all passenger doors will unlock.

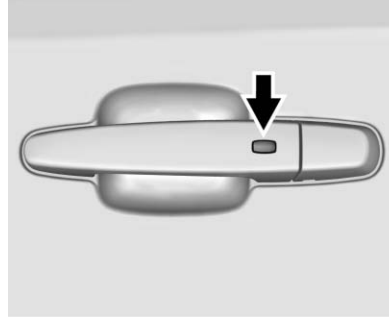

Driver Shown, Passenger Similar

Pressing the lock/unlock button will cause all doors to lock if any of the following occur:

- It has been more than five seconds since the first lock/unlock button press.
- Two lock/unlock button presses were used to unlock all doors.
- Any vehicle door has opened and all doors are now closed.

Keyless Unlocking/Locking from Passenger Doors

When the doors are locked and the RKE transmitter is within 1 m (3 ft) of the door handle, pressing the lock/unlock button on that door handle will unlock all doors. Pressing the lock/unlock button will cause all doors to lock if any of the following occur:

- The lock/unlock button was used to unlock all doors.
- Any vehicle door has opened and all doors are now closed.

Passive Locking

If equipped with Keyless Access, this vehicle will lock several seconds after all doors are closed if the vehicle is off and at least one RKE transmitter has been removed or none remain in the interior.

If other electronic devices interfere with the RKE transmitter signal, the vehicle may not detect the RKE transmitter inside the vehicle. If passive locking is enabled, the doors may lock with the RKE

transmitter inside the vehicle. Do not leave the RKE transmitter in an unattended vehicle.

To customize the doors to automatically lock when exiting the vehicle, see “Remote Lock, Unlock, Start” under *Vehicle Personalization* ⇨ *142*.

Temporary Disable of Passive Locking Feature

Temporarily disable passive locking by pressing and holding 🔒 on the interior door switch with a door open for at least four seconds, or until three chimes are heard. Passive locking will then remain disabled until 🔓 on the interior door is pressed, or until the vehicle is turned on.

Remote Left in Vehicle Alert

When the vehicle is turned off and an RKE transmitter is left in the vehicle, the horn will chirp three times after all doors are closed. To turn on or off, see *Vehicle Personalization* ⇨ *142*.

Remote No Longer in Vehicle

If the vehicle is on, with a door open, and then all doors are closed, the vehicle will check for RKE transmitters inside. If an RKE transmitter is not detected, the Driver Information Center (DIC) will display NO REMOTE DETECTED and the horn will chirp three times. This occurs only once each time the vehicle is driven.

Keyless Liftgate Opening

Press the touch pad on the liftgate handle to open the liftgate if the RKE transmitter is within 1 m (3 ft).

Programming Transmitters to the Vehicle

Only RKE transmitters programmed to the vehicle will work. If a transmitter is lost or stolen, a replacement can be purchased and programmed through your dealer. The vehicle can be reprogrammed so that lost or stolen transmitters no longer work. Each vehicle can have up to eight transmitters matched to it.

Programming with Recognized Transmitters

A new transmitter can be programmed to the vehicle when there are two recognized transmitters.

To program, the vehicle must be off and all of the transmitters, both currently recognized and new, must be with you.

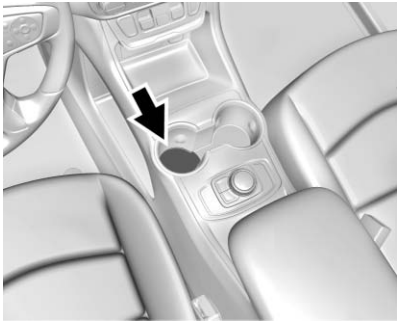

1. Place the two recognized transmitters in the cupholder.
2. Remove the key lock cylinder cap on the driver door handle. See *Door Locks* ⇨ *37*. Insert

the vehicle key of the new transmitter into the key lock cylinder on the driver door handle and turn the key, counterclockwise, to the unlock position five times within 10 seconds.

The Driver Information Center (DIC) displays READY FOR REMOTE #2, 3, 4, ETC.

3. Remove the two recognized transmitters from the cupholder.
4. Place the new transmitter into the cupholder.
5. Press ENGINE START/STOP. When the transmitter is learned the DIC display will show that it is ready to program the next transmitter.
6. Remove the transmitter from the cupholder and press 🔓 or 🔒 on the RKE transmitter.

   To program additional transmitters, repeat Steps 4–6.

   When all additional transmitters are programmed, press and hold ENGINE START/STOP for 12 seconds to exit programming mode.
7. Put the key back into the transmitter.

Programming without Recognized Transmitters

If two currently recognized transmitters are not available, follow this procedure to program up to eight transmitters. This feature is not available in Canada. This procedure will take approximately 30 minutes to complete. The vehicle must be off and all of the transmitters you wish to program must be with you.

1. Remove the key lock cylinder cap on the driver door handle. See *Door Locks* ⇨ *37*. Insert the vehicle key of the transmitter into the key lock cylinder on the driver door handle and turn the key, counterclockwise, to the unlock position five times within 10 seconds.

   The Driver Information Center (DIC) displays REMOTE LEARN PENDING, PLEASE WAIT.
2. Wait for 10 minutes until the DIC displays PRESS ENGINE START BUTTON TO LEARN and then press ENGINE START/STOP.

   The DIC display will again show REMOTE LEARN PENDING, PLEASE WAIT.
3. Repeat Step 2 two additional times. After the third time all previously known transmitters will no longer work with the vehicle. Remaining transmitters can be relearned during the next steps.

   The DIC display should now show READY FOR REMOTE # 1.

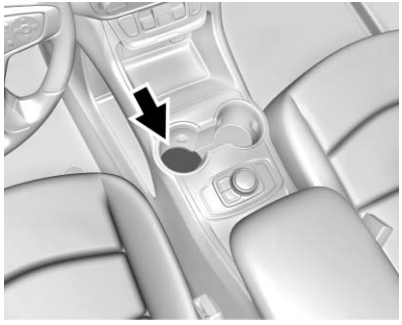

4. Place the new transmitter into the cupholder.
5. Press ENGINE START/STOP. When the transmitter is learned the DIC display will show that it is ready to program the next transmitter.
6. Remove the transmitter from the cupholder and press 🔒 or 🔓 on the RKE transmitter.

   To program additional transmitters, repeat Steps 4–6.

   When all additional transmitters are programmed, press and hold ENGINE START/STOP for 12 seconds to exit programming mode.
7. Put the key back into the transmitter.

Starting the Vehicle with a Low Transmitter Battery

When the vehicle is started, if the transmitter battery is weak, the DIC may display NO REMOTE DETECTED or NO REMOTE KEY WAS DETECTED PLACE KEY IN TRANSMITTER POCKET THEN START YOUR VEHICLE. The REPLACE BATTERY IN REMOTE KEY message may also be displayed at this time.

To start the vehicle:

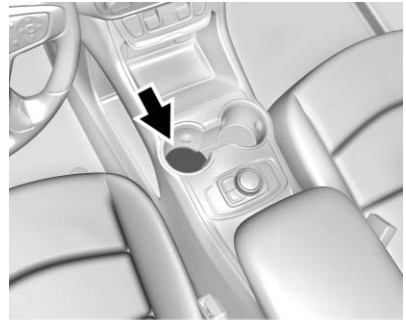

1. Place the transmitter in the cupholder.
2. With the vehicle in P (Park) or N (Neutral), press the brake pedal and ENGINE START/STOP.

   Replace the transmitter battery as soon as possible.

Battery Replacement

Replace the battery in the transmitter soon if the REPLACE BATTERY IN REMOTE KEY message displays in the DIC.

Caution

When replacing the battery, do not touch any of the circuitry on the transmitter. Static from your body could damage the transmitter.

To replace the battery:

1. Press the button on the side of the transmitter to remove the key.

2. Insert a flat, thin object in the center of the transmitter to separate and remove the back cover.

3. Lift the battery with a flat object.
4. Remove the battery.
5. Insert the new battery, positive side toward the back cover. Replace with a CR2032 or equivalent battery.
6. Push together the transmitter.

Remote Vehicle Start

The vehicle may have this feature that allows you to start the engine from outside the vehicle.

: This button will be on the RKE transmitter if the vehicle has remote start.

The climate control system will use the previous settings during a remote start. The rear defog may come on during remote start based on cold ambient conditions. The rear defog indicator light does not come on during remote start.

If the vehicle has heated and ventilated front seats, they may come on during a remote start. See *Heated and Ventilated Front Seats* ⇨ *63*.

Laws in some local communities may restrict the use of remote starters. For example, some laws require a person using remote start to have the vehicle in view. Check local regulations for any requirements.

Other conditions can affect the performance of the transmitter. See *Remote Keyless Entry (RKE) System* ⇨ *29*.

Do not use remote start if the vehicle is low on fuel.

Starting the Engine Using Remote Start

1. Press and release 🔒 on the RKE transmitter.
2. Immediately press and hold ⟲ for at least four seconds or until the turn signal lamps flash. The turn signal lamps flashing confirms the request to remote start the vehicle has been received.

   The parking lamps will turn on and remain on as long as the engine is running. The vehicle's doors will be locked.
3. Turn the ignition on before driving.

   The engine will shut off after 10 minutes unless a time extension is done or the ignition is turned on.

Extending Engine Run Time

For a 10-minute extension, after 30 seconds repeat Steps 1 and 2 while the engine is still running. The remote start can be extended once.

When the remote start is extended, the second 10 minutes will be added.

For example, if the engine has been running for 10 minutes, and 10 minutes are added, the engine will run for a total of 20 minutes.

A maximum of two remote starts or a start with an extension are allowed between ignition cycles.

The ignition must be turned on and then back off to use remote start again.

Canceling a Remote Start

To shut off the engine:

- Press and hold ⟲ until the parking lamps turn off.
- Turn on the hazard warning flashers.
- Turn the ignition on and then off.

Conditions in Which Remote Start Will Not Work

The remote vehicle start feature will not operate if:

- A transmitter is in the vehicle.
- The hood is not closed.
- The hazard warning flashers are on.
- There is an emission control system malfunction.
- The engine coolant temperature is too high.
- The oil pressure is low.
- Two remote vehicle starts or a start with an extension have already been used.
- The vehicle is not in P (Park).

Remote Start Ready

If the vehicle does not have the remote vehicle start feature, it may have the remote start ready feature.

This feature allows your dealer to add the manufacturer's remote vehicle start feature. See your dealer to add the manufacturer's remote vehicle start feature to the vehicle.

Door Locks

⚠ Warning

Unlocked doors can be dangerous.

- Passengers, especially children, can easily open the doors and fall out of a moving vehicle. The doors can be unlocked and opened while the vehicle is moving. The chance of being thrown out of the vehicle in a crash is increased if the doors are not locked. So, all passengers should wear seat belts properly and the

(Continued)

Warning (Continued)

doors should be locked whenever the vehicle is driven.

- Young children who get into unlocked vehicles may be unable to get out. A child can be overcome by extreme heat and can suffer permanent injuries or even death from heat stroke. Always lock the vehicle whenever leaving it.
- Outsiders can easily enter through an unlocked door when you slow down or stop the vehicle. Locking the doors can help prevent this from happening.

To lock or unlock the door from outside the vehicle:

- Press 🔒 or 🔓 on the Remote Keyless Entry (RKE) transmitter. See *Remote Keyless Entry (RKE) System Operation* ⇨ *29*.
- Use the key in the driver door. The key cylinder is covered with a cap.

To lock or unlock the door from inside the vehicle:

- Press 🔒 or 🔓 on the power door lock switch.
- Push down on a door lock knob to lock a door.
- Pull the door handle once to unlock the door. Pull the handle again to unlatch it.

Keyless Access

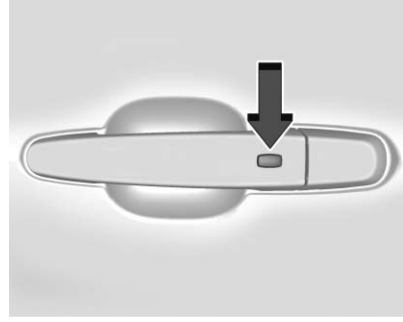

If equipped, the RKE transmitter must be within 1 m (3 ft) of the liftgate or door being opened. Press the button on the door handle to open. See “Keyless Access Operation” in *Remote Keyless Entry (RKE) System Operation* ⇨ *29*.

Driver Door Key Lock Cylinder Access (In Case of Dead Battery)

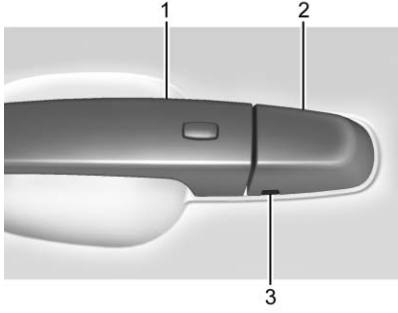

To access the driver door key lock cylinder:

1. Pull the door handle (1) to the open position and hold it open until cap removal is complete.
2. Insert the key into the slot (3) on the bottom of the cap (2) and lift the key upward.
3. Move the cap (2) rearward and remove.
4. Use the key in the cylinder.

To replace the cap:

1. Pull the door handle (1) to the open position and hold it open until cap installation is complete.

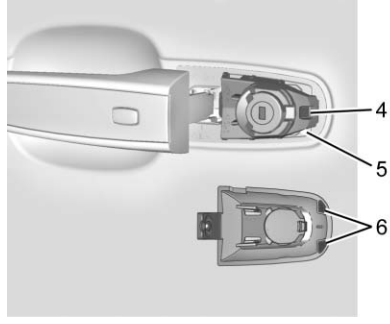

2. Insert the two tabs (6) at the back of the cap between the seal (5) and the metal base (4).

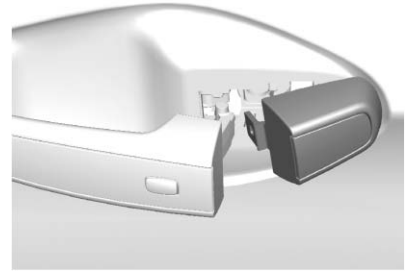

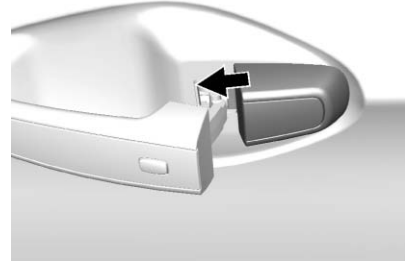

3. Slide the cap forward and press the forward edge to install the cap in place.
4. Release the door handle.

5. Check that the cap is secure.

Free-Turning Locks

The door key lock cylinder turns freely when either the wrong key is used, or the correct key is not fully inserted. The free-turning door lock feature prevents the lock from being forced open. To reset the lock, turn it to the vertical position with the correct key fully inserted. Remove the key and insert it again. If this does not reset the lock, turn the key halfway around in the cylinder and repeat the reset procedure.

Power Door Locks

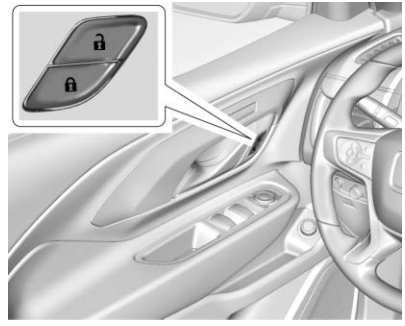

🔒 **:** Press to lock the doors.

🔓 **:** Press to unlock the doors.

Delayed Locking

This feature delays the actual locking of the doors until five seconds after all doors are closed.

Delayed locking can only be turned on when the Open Door Anti-Lockout feature has been turned off.

When 🔒 is pressed on the power door lock switch with the door open, a chime will sound three times indicating that delayed locking is active.

The doors will then lock automatically five seconds after all doors are closed. If a door is reopened before five seconds have elapsed, the five-second timer will reset once all the doors are closed again.

Press 🔒 on the door lock switch again, or press 🔒 on the RKE transmitter, to override this feature and lock the doors immediately.

Delayed locking can be programmed. See *Vehicle Personalization* ⇨ *142*.

Automatic Door Locks

The doors will lock automatically when all doors are closed, the ignition is on, and the vehicle is shifted out of P (Park).

If a vehicle door is unlocked and then opened and closed, the doors will lock either when your foot is removed from the brake or the vehicle speed becomes faster than 13 km/h (8 mph).

To unlock the doors:

- Press 🔓 on the power door lock switch.
- Shift into P (Park).

Automatic door locking cannot be disabled. Automatic door unlocking can be programmed. See *Vehicle Personalization* ⇨ *142*.

Lockout Protection

If the ignition is on or in ACC/ACCESSORY and the power door lock switch is pressed with the driver door open, all the doors will lock and only the driver door will unlock.

If the vehicle is off and locking is requested while a door is open, when all doors are closed the vehicle will check for RKE transmitters inside. If an RKE transmitter is detected and the number of RKE transmitters inside has not reduced, the driver door will unlock and the horn will chirp three times.

Lockout Protection can be manually overridden by pressing and holding 🔒 on the power door lock switch.

Open Door Anti-Lockout

If Open Door Anti-Lockout is turned on and the vehicle is off, the driver door is open, and locking is requested, all the doors will lock and the driver door will remain open. Press the button again to lock the driver door. The Open Door Anti-Lockout feature can be turned on or off. See *Vehicle Personalization* ⇨ *142*.

Safety Locks

The rear door safety locks prevent passengers from opening the rear doors from inside the vehicle.

Manual Safety Locks

If equipped, the safety lock is on the inside edge of the rear doors. To use the safety lock:

1. Move the lever down to the lock position.
2. Close the door.
3. Do the same for the other rear door.

To open a rear door when the safety lock is on:

1. Unlock the door by activating the inside handle, by pressing the power door lock switch, or by using the Remote Keyless Entry (RKE) transmitter.
2. Open the door from the outside.

When the safety lock is enabled, adults and older children will not be able to open the rear door from the inside. Cancel the safety locks to enable the doors to open from the inside.

To cancel the safety lock:

1. Unlock the door and open it from the outside.
2. Move the lever up to unlock. Do the same for the other door.

Doors

Liftgate

⚠ Warning

Exhaust gases can enter the vehicle if it is driven with the liftgate or trunk/hatch open, or with any objects that pass through the seal between the body and the trunk/hatch or liftgate. Engine exhaust contains carbon monoxide (CO) which cannot be seen or smelled. It can cause unconsciousness and even death.

If the vehicle must be driven with the liftgate or trunk/hatch open:

- Close all of the windows.
- Fully open the air outlets on or under the instrument panel.

(Continued)

Warning (Continued)

- Adjust the climate control system to a setting that brings in only outside air and set the fan speed to the highest setting. See “Climate Control Systems” in the Index.
- If the vehicle is equipped with a power liftgate, disable the power liftgate function.

See *Engine Exhaust* ⇨ *196*.

Caution

To avoid damage to the liftgate or liftgate glass, make sure the area above and behind the liftgate is clear before opening it.

Manual Liftgate

To unlock the liftgate, press 🔓 on the power door lock switch or press 🔓 on the Remote Keyless

Entry (RKE) transmitter twice within five seconds. See *Remote Keyless Entry (RKE) System Operation* ⇨ *29*.

To open the liftgate, press the touch pad on the bottom of the liftgate and lift up.

Use the pull cup to lower and close the liftgate. Do not press the touch pad while closing the liftgate. This may cause the liftgate to be unlatched.

Always close the liftgate before driving.

Power Liftgate Operation

⚠ Warning

You or others could be injured if caught in the path of the power liftgate. Make sure there is no one in the way of the liftgate as it is opening and closing.

Caution

To avoid damage to the liftgate or liftgate glass, make sure the area above and behind the liftgate is clear before opening it.

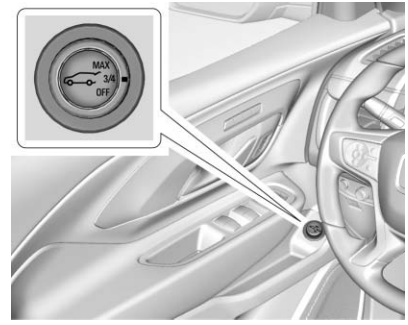

If equipped with a power liftgate, the switch is usually on the driver door. The switch can also be on the overhead console. The vehicle must be in P (Park).

The modes are:

- MAX: Opens to maximum height.
- 3/4: Opens to a reduced height that can be set from 3/4 to fully open. Use to prevent the liftgate from opening into overhead obstructions such as a garage door or roof-mounted cargo. The liftgate can be manually opened all the way.

- OFF: Opens manually only.

To power open or close the liftgate, select MAX or 3/4 mode.

- Press twice quickly on the RKE transmitter until the liftgate moves.
- Press on the driver door. The driver door must either be unlocked or locked without the security armed.
- Press the touch pad on the bottom of the liftgate after unlocking all doors. If equipped with Keyless Access, the RKE transmitter must be within 1 m (3 ft).

- Press on the bottom of the liftgate next to the pull cup to close.

Press any liftgate button or the touch pad while the liftgate is moving to stop it. Pressing again restarts the operation in the reverse direction. The touch pad on the liftgate handle cannot be used to close the liftgate.

Caution

Manually forcing the liftgate to open or close during a power cycle can damage the vehicle. Allow the power cycle to complete.

The power liftgate may be temporarily disabled under extreme low temperatures, or after repeated power cycling over a short period of time. If this occurs, the liftgate can still be operated manually.

If the vehicle is shifted out of P (Park) while the power function is in progress, the liftgate will continue to completion. If the vehicle is accelerated before the liftgate has completed moving, the liftgate may stop or reverse direction. Make sure the liftgate is closed and latched before driving.

Falling Liftgate Detection

If the power liftgate automatically closes after a power opening cycle, it indicates that the system is

reacting to excess weight on the liftgate or a possible support strut failure. A repetitive chime will sound while the falling liftgate detection feature is operating. Remove any excess weight. If the liftgate continues to automatically close after opening, see your dealer for service before using the power liftgate.

Interfering with the power liftgate motion or manually closing the liftgate too quickly after power opening may resemble a support strut failure. This could also activate the falling liftgate detection feature. Allow the liftgate to complete its operation and wait a few seconds before manually closing the liftgate.

Obstacle Detection Features

If the liftgate encounters an obstacle during a power open or close cycle, the liftgate will automatically reverse direction and move a short distance away from the obstacle. After removing the obstruction, the power liftgate operation can be used again. If the liftgate encounters multiple obstacles on the same power cycle, the power function will deactivate. After removing the obstructions, manually close the liftgate which will allow normal power operation functions to resume.

If the vehicle is locked while the liftgate is closing, and an obstacle is encountered that prevents the liftgate from completely closing, the horn will sound as an alert that the liftgate did not close.

Pinch sensors are on the side edges of the liftgate. If an object is caught between the liftgate and the vehicle and presses against this sensor, the liftgate will reverse direction and open fully. The liftgate will remain open until it is activated again or closed manually.

Setting the 3/4 Mode

To change the position the liftgate stops at when opening:

1. Select MAX or 3/4 mode and power open the liftgate.
2. Stop the liftgate movement at the desired height by pressing any liftgate switch. Manually adjust the liftgate position if needed.
3. Press and hold next to the pull cup on the bottom of the liftgate until the turn signals flash and a beep sounds. This indicates the setting has been recorded.

The liftgate cannot be set below a minimum programmable height. If there is no light flash or sound, then the height adjustment may be too low.

Manual Operation of Power Liftgate

Select OFF to manually operate the liftgate. See “Manual Liftgate” at the beginning of this section.

Hands-Free Operation

The liftgate may be operated with a kicking motion under the rear bumper between the left exhaust pipe and the license plate.

The liftgate will not operate if the RKE transmitter is not within 1 m (3 ft).

The hands-free feature will not work while the liftgate is moving. To stop the liftgate while in motion use one of the liftgate switches.

The hands-free feature can be customized. See *Vehicle Personalization* ⇨ *142*. Choose from the following:

On-Open and Close : The kicking motion is activated to both open and close the liftgate.

On-Open Only : The kicking motion is activated to only open the liftgate.

Off : The feature is disabled.

Length of Kick Zone

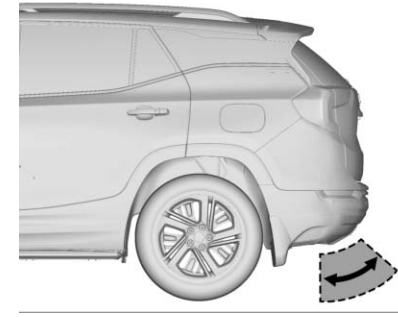

Kick Motion

Caution
Attempting to move the liftgate too quickly and with excessive force may result in damage to the vehicle.

To operate, kick your foot straight up in one swift motion under the rear bumper between the left exhaust pipe and the license plate, then pull it back.

Caution

Splashing water may cause the liftgate to open. Keep the RKE transmitter away from the rear bumper detection area or turn the liftgate mode to OFF when cleaning or working near the rear bumper to avoid accidental opening.

- Do not sweep your foot side to side.
- Do not keep your foot under the bumper; the liftgate will not activate.
- Do not touch the liftgate until it has stopped moving.
- This feature may be temporarily disabled under some conditions. If the liftgate does not respond to the kick, open or close the liftgate by another method or start the vehicle. The feature will be re-enabled.

When closing the liftgate using this feature, there will be a short delay. The taillamps will flash and a chime will sound. Step away from the liftgate before it starts moving.

Vehicle Security

This vehicle has theft-deterrent features; however, they do not make the vehicle impossible to steal.

Vehicle Alarm System

This vehicle has an anti-theft alarm system.

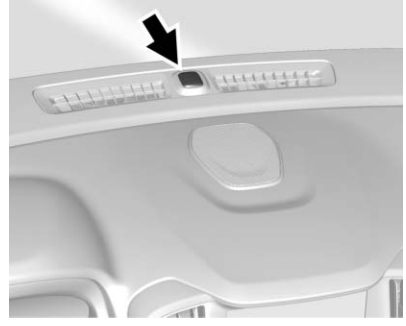

The indicator light, on the instrument panel near the windshield, indicates the status of the system:

Off : Alarm system is disarmed.

On Solid : Vehicle is secured during the delay to arm the system.

Fast Flash : Vehicle is unsecured. A door, the hood, or the liftgate is open.

Slow Flash : Alarm system is armed.

Arming the Alarm System

1. Turn off the vehicle.
2. Lock the vehicle in one of two ways:
   - Use the RKE transmitter.
   - With a door open, press the interior 🔒.
3. After 30 seconds the alarm system will arm, and the indicator light will begin to slowly flash indicating the alarm system is operating. Pressing 🔒 on the RKE transmitter a second time will bypass the 30-second delay and immediately arm the alarm system.

The vehicle alarm system will not arm if the doors are locked with the key.

If the driver door is opened without first unlocking with the RKE transmitter, the horn will chirp and the lights will flash to indicate pre-alarm. If the vehicle is not started, or the door is not unlocked by pressing 🔓 on the RKE transmitter during the 10-second pre-alarm, the alarm will be activated.

If a door, the hood, or the liftgate is opened without first disarming the system, the turn signals will flash and the horn will sound for about 30 seconds. The alarm system will then re-arm to monitor for the next unauthorized event.

Disarming the Alarm System

To disarm the alarm system or turn off the alarm if it has been activated:

- Press 🔓 on the RKE transmitter.
- Start the vehicle.

To avoid setting off the alarm by accident:

- Lock the vehicle after all occupants have left the vehicle and all doors are closed.
- Always unlock a door with the RKE transmitter.

Unlocking the driver door with the key will not disarm the system or turn off the alarm.

How to Detect a Tamper Condition

If 🔓 is pressed on the RKE transmitter and the horn chirps and the lights flash three times, an alarm occurred previously while the alarm system was armed.

If the alarm has been activated, a message will appear on the Driver Information Center (DIC).

Immobilizer

See *Radio Frequency Statement* ⇨ *379*.

Immobilizer Operation

This vehicle has a passive theft-deterrent system.

The system does not have to be manually armed or disarmed.

The vehicle is automatically immobilized when the transmitter leaves the vehicle.

The immobilization system is disarmed when the ignition is turned on or in ACC/ACCESSORY and a valid Remote Keyless Entry (RKE) transmitter is in the vehicle.

The security light, in the instrument cluster, comes on if there is a problem with arming or disarming the theft-deterrent system.

The system has one or more RKE transmitters matched to an immobilizer control unit in your vehicle. Only a correctly matched RKE transmitter will start the vehicle. If the transmitter is ever damaged, you may not be able to start your vehicle.

When trying to start the vehicle, the security light may come on briefly when the ignition is turned on.

If the engine does not start and the security light stays on, there is a problem with the system. Turn the ignition off and try again.

If the ignition will not change from off to on or ACC/ACCESSORY, and the RKE transmitter appears to be undamaged, try another transmitter. Or, you may try placing the transmitter in the cupholder in the center console.

If the ignition mode will not change with the other transmitter or with the transmitter in the cupholder, your vehicle needs service. If the ignition does change modes, the first transmitter may be faulty. See your dealer who can service the theft-deterrent system and have a new RKE transmitter programmed to the vehicle.

It is possible for the immobilizer system to learn new or replacement RKE transmitters. Up to eight transmitters can be programmed to the vehicle. To program additional transmitters, see “Programming Transmitters to the Vehicle” under *Remote Keyless Entry (RKE) System Operation* ⇨ *29*.

Do not leave the transmitter or device that disarms or deactivates the theft-deterrent system in the vehicle.

Exterior Mirrors

Convex Mirrors

⚠ Warning

A convex mirror can make things, like other vehicles, look farther away than they really are. If you cut too sharply into the right lane, you could hit a vehicle on the right. Check the inside mirror or glance over your shoulder before changing lanes.

The passenger side mirror is convex shaped. A convex mirror's surface is curved so more can be seen from the driver seat.

Power Mirrors

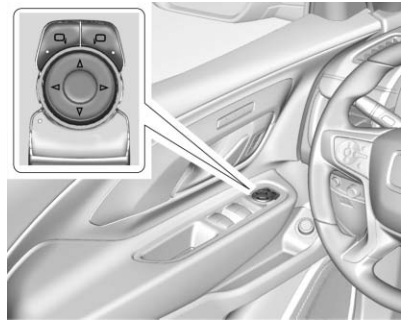

To adjust the mirrors:

1. Press ⊡ or ⊡ to choose the driver or passenger mirror.
2. Press the arrows on the control pad to move each mirror in the desired direction.

Folding Mirrors

Manual Folding Mirrors

The mirrors can be folded inward toward the vehicle to prevent damage when going through an automatic car wash. Push the mirror outward to return it to the original position.

Memory Mirrors

The vehicle may have memory mirrors. See *Memory Seats* ⇨ *60*.

Lane Change Alert (LCA)

The vehicle may have LCA. See *Lane Change Alert (LCA)* ⇨ *232*.

Heated Mirrors

If equipped, the heated outside mirrors turn on when the rear window defogger is on and help to clear fog or frost from the surface of the mirrors.

REAR **:** This button is on the climate control panel.

See “Rear Window Defogger” under *Dual Automatic Climate Control System* ⇨ *162*.

Automatic Dimming Mirror

The vehicle has an automatic dimming outside mirror on the driver side. The mirror will adjust for the glare of headlamps behind you.

Reverse Tilt Mirrors

If equipped with memory seats, the passenger and/or driver mirror tilts to a preselected position when the vehicle is in R (Reverse). This allows the curb to be seen when parallel parking.

The mirror(s) return to the original position when:

- The vehicle is shifted out of R (Reverse), or remains in R (Reverse) for about 30 seconds.
- The ignition is turned off.
- The vehicle is driven in R (Reverse) above a set speed.

Interior Mirrors

Interior Rearview Mirrors

Adjust the rearview mirror for a clear view of the area behind the vehicle.

Do not spray glass cleaner directly on the mirror. Use a soft towel dampened with water.

Manual Rearview Mirror

Push the tab forward for daytime use and pull it rearward for nighttime use to avoid glare of the headlamps from behind.

Automatic Dimming Rearview Mirror

If equipped, automatic dimming reduces the glare of headlamps from behind. The dimming feature comes on when the vehicle is started.

Windows

⚠ Warning

Never leave a child, a helpless adult, or a pet alone in a vehicle, especially with the windows closed in warm or hot weather. They can be overcome by the extreme heat and suffer permanent injuries or even death from heat stroke.

The vehicle aerodynamics are designed to improve fuel economy performance. This may result in a pulsing sound when either rear window is down and the front windows are up. To reduce the sound, open either a front window or the sunroof, if equipped.

Power Windows

⚠ Warning

Children could be seriously injured or killed if caught in the path of a closing window. Never leave the Remote Keyless Entry (RKE) transmitter in a vehicle with children. When there are children in the rear seat, use the window lockout switch to prevent operation of the windows. See *Keys* ⇨ *28*.

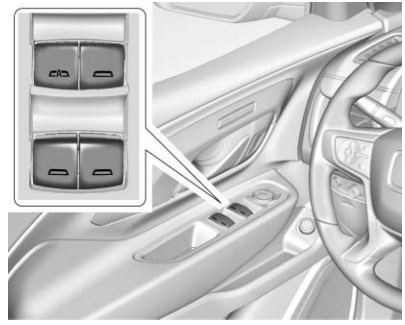

The power windows work when the ignition is on, in ACC/ACCESSORY, or in Retained Accessory Power (RAP). See *Retained Accessory Power (RAP)* ⇨ *192*.

Using the window switch, press to open or pull to close the window.

The windows may be temporarily disabled if they are used repeatedly within a short time.

Window Lockout

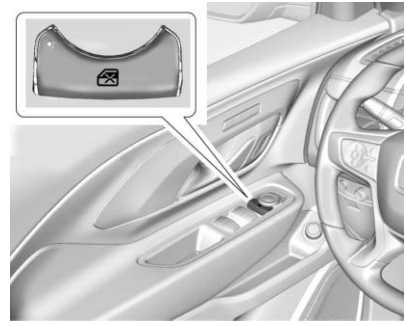

This feature stops the rear door passenger window switches from working.

Press to engage the rear window lockout feature. The indicator light is on when engaged.

Press again to disengage.

Window Express Movement

All windows can be opened without holding the window switch. Press the switch down fully and quickly release to express open the window.

If equipped, pull the window switch up fully and quickly release to express close the window.

Briefly press or pull the window switch in the same direction to stop that window's express movement.

Window Automatic Reversal System

The express-close feature will reverse window movement if it comes in contact with an object. Extreme cold or ice could cause the window to auto-reverse. The window will operate normally after the object or condition is removed.

Automatic Reversal System Override

⚠ Warning

If automatic reversal system override is active, the window will not reverse automatically. You or others could be injured and the window could be damaged. Before using automatic reversal

(Continued)

Warning (Continued)

system override, make sure that all people and obstructions are clear of the window path.

When the engine is on, override the automatic reversal system by pulling and holding the window switch if conditions prevent it from closing.

Programming the Power Windows

Programming may be necessary if the vehicle's battery has been disconnected or discharged. If the window will not express close, program each express-close window:

1. Close all doors.
2. Turn the ignition on or to ACC/ACCESSORY.
3. Partially open the window to be programmed. Then close it and continue to pull the switch briefly after the window has fully closed.
4. Open the window and continue to press the switch briefly after the window has fully opened.

Remote Window Operation

If equipped, this feature allows all the windows to be opened remotely.

If enabled in vehicle personalization, press and hold 🔓 on the RKE transmitter. See *Vehicle Personalization* ⇨ *142*.

Sun Visors

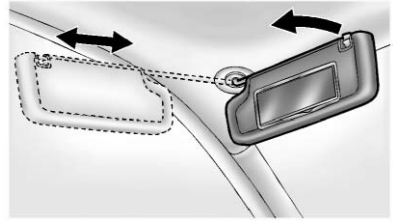

Pull the sun visor down to block glare. Detach the sun visor from the center mount to pivot to the side window and, if equipped, extend along the rod.

Roof

Sunroof

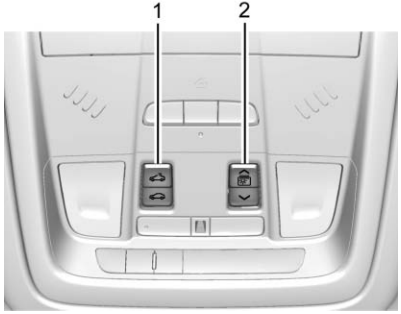

1. Sunroof Switch
2. Sunshade Switch

If equipped, the sunroof only operates when the ignition is on or in ACC/ACCESSORY, or when Retained Accessory Power (RAP) is active. See *Retained Accessory Power (RAP)* ⇨ *192*.

Sunroof Switch

Express-Open/Express-Close : To express-open the sunroof, fully press and release (1). Press the switch again to stop it. To express-close the sunroof, fully press and release (1). Press the switch again to stop it.

Open/Close (Manual Mode) : To open the sunroof, press and hold (1) until the sunroof reaches the desired position. Press and hold (1) to close it.

Comfort Stop : The sunroof has a comfort stop feature that stops the sunroof from opening fully. Press and release the rear of to open the sunroof to the comfort open position. Pressing the rear of again will open the sunroof fully. If the sunshade is not fully open when the comfort stop feature is pressed the second time, the sunshade will open fully.

Vent : From the closed position, press (1) to vent the sunroof.

Sunshade Switch

Express-open/Express-close : To express-open the sunshade, fully press and release (2). To express-close the sunshade, fully press and release (2) . Press the switch again to stop it.

Open/Close : To open the sunshade, press and hold (2) until the sunshade reaches the desired position.

When the sunroof is opened, an air deflector will automatically raise. The air deflector will retract when the sunroof is closed.

Automatic Reversal System

The sunroof has an automatic reversal system that is only active when the sunroof is operated in express-close mode.

If an object is in the path while express closing, the reversal system will detect an object, stop, and open the sunroof again.

If frost or other conditions prevent closing, override the feature by closing the sunroof in manual mode. To stop movement, release the switch.

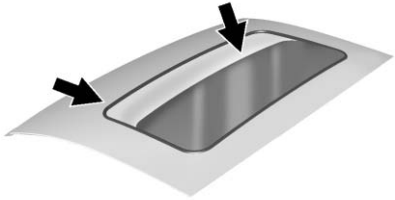

Dirt and debris may collect on the sunroof seal or in the track. This could cause issues with sunroof operation and noise. It could also plug the water drainage system. Periodically open the sunroof and remove any obstacles or loose debris. Wipe the sunroof seal and roof sealing area using a clean cloth, mild soap, and water. Do not remove grease from the sunroof.

If water is seen dripping into the water drainage system, this is normal.

Seats and Restraints

Head Restraints
Head Restraints 56

Front Seats
Seat Adjustment 58
Power Seat Adjustment 58
Lumbar Adjustment 59
Reclining Seatbacks 59
Memory Seats 60
Heated and Ventilated Front Seats 63
Folding Seatback 64

Rear Seats
Rear Seats 65
Heated Rear Seats 68

Seat Belts
Seat Belts 69
How to Wear Seat Belts Properly 70
Lap-Shoulder Belt 71
Seat Belt Use During Pregnancy 74
Seat Belt Extender 74
Safety System Check 75
Seat Belt Care 75
Replacing Seat Belt System Parts after a Crash 75

Airbag System
Airbag System 76
Where Are the Airbags? 78
When Should an Airbag Inflate? 79
What Makes an Airbag Inflate? 80
How Does an Airbag Restrain? 80
What Will You See after an Airbag Inflates? 81
Passenger Sensing System . . . 82
Servicing the Airbag-Equipped Vehicle 86
Adding Equipment to the Airbag-Equipped Vehicle 86
Airbag System Check 87
Replacing Airbag System Parts after a Crash 87

Child Restraints
Older Children 88
Infants and Young Children 90
Child Restraint Systems 92
Where to Put the Restraint 94
Lower Anchors and Tethers for Children (LATCH System) 95
Replacing LATCH System Parts After a Crash 100
Securing Child Restraints (With the Seat Belt in the Rear Seat) 101
Securing Child Restraints (With the Seat Belt in the Front Seat) 103

Head Restraints

The vehicle's front seats have adjustable head restraints in the outboard seating positions.

⚠ Warning

With head restraints that are not installed and adjusted properly, there is a greater chance that occupants will suffer a neck/spinal injury in a crash. Do not drive until the head restraints for all occupants are installed and adjusted properly.

If your vehicle has rear head restraints that fold down, always return them to the full upright position whenever an occupant is seated in the seat.

Adjust the head restraint so that the top of the restraint is at the same height as the top of the occupant's head. This position reduces the chance of a neck injury in a crash.

Front Seats

The vehicle's front seats have adjustable head restraints in the outboard seating positions.

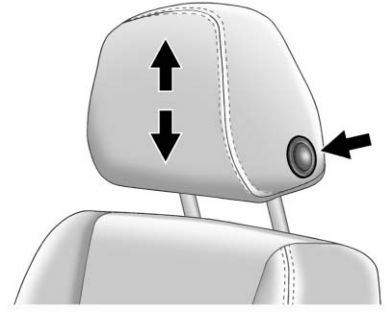

The height of the head restraint can be adjusted.

To raise or lower the head restraint, press the button located on the side of the head restraint and pull up or push the head restraint down, and release the button. Pull and push on the head restraint after the button is released to make sure that it is locked in place.

The front seat outboard head restraints are not removable.

Rear Seats

Adjusting the Rear Head Restraint

The vehicle's rear seats have adjustable head restraints in the outboard seating positions.

The height of the head restraint can be adjusted. Pull the head restraint up to raise it. Try to move the head restraint to make sure that it is locked in place.

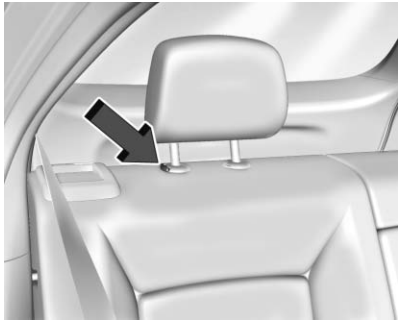

To lower the head restraint, press the button, located on the top of the seatback, and push the head restraint down. Try to move the head restraint after the button is released to make sure that it is locked in place.

Folding the Rear Head Restraint

The head restraint can be folded rearward to allow for better visibility when the rear seat is unoccupied.

To fold the head restraint, press the button on the side of the head restraint.

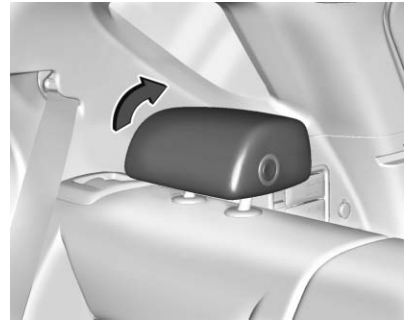

The head restraint will fold rearward automatically.

When an occupant or child restraint is in the seat, always return the head restraint to the full upright position. Pull the head restraint up and forward until it locks into place. Push and pull on the head restraint to make sure that it is locked.

Always adjust the head restraint so that the top of the restraint is at the same height as the top of the occupant's head.

Rear outboard head restraints are not removable.

Front Seats

Seat Adjustment

⚠ Warning

You can lose control of the vehicle if you try to adjust a driver seat while the vehicle is moving. Adjust the driver seat only when the vehicle is not moving.

To adjust the seat position:

1. Pull the handle at the front of the seat cushion to unlock it.
2. Move the seat forward or rearward and release the handle.
3. Try to move the seat back and forth to be sure it is locked in place.

Seat Height Adjuster

Move the lever up or down to raise or lower the seat.

Power Seat Adjustment

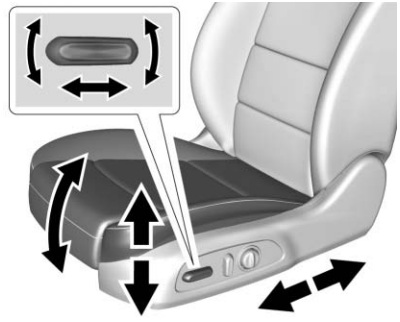

To adjust a power seat, if equipped:

- Move the seat forward or rearward by sliding the control forward or rearward.
- Raise or lower the front part of the seat cushion by moving the front of the control up or down.
- Raise or lower the entire seat by moving the rear of the control up or down.

To adjust the seatback, see *Reclining Seatbacks* ⇨ *59*.

Lumbar Adjustment

If equipped, press and hold the front or rear of the control to increase or decrease lumbar support.

Reclining Seatbacks

⚠ Warning

Sitting in a reclined position when the vehicle is in motion can be dangerous. Even when buckled up, the seat belts cannot do their job.

(Continued)

Warning (Continued)

The shoulder belt will not be against your body. Instead, it will be in front of you. In a crash, you could go into it, receiving neck or other injuries.

The lap belt could go up over your abdomen. The belt forces would be there, not at your pelvic bones. This could cause serious internal injuries.

For proper protection when the vehicle is in motion, have the seatback upright. Then sit well back in the seat and wear the seat belt properly.

Do not have a seatback reclined if the vehicle is moving.

Manual Reclining Seatbacks

⚠ Warning

If either seatback is not locked, it could move forward in a sudden stop or crash. That could cause injury to the person sitting there. Always push and pull on the seatbacks to be sure they are locked.

To recline a manual seatback:

1. Lift the lever.
2. Move the seatback to the desired position, and then release the lever to lock the seatback in place.
3. Push and pull on the seatback to make sure it is locked.

To return the seatback to the upright position:

1. Lift the lever fully without applying pressure to the seatback, and the seatback will return to the upright position.
2. Push and pull on the seatback to make sure it is locked.

Power Reclining Seatbacks

To adjust a power seatback, if available:

- Tilt the top of the control rearward to recline.
- Tilt the top of the control forward to raise.

Memory Seats

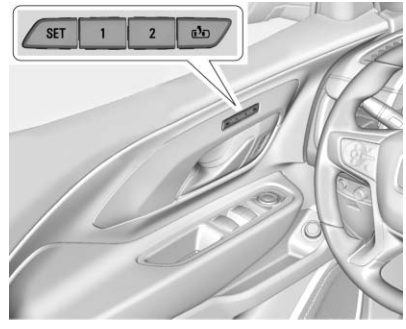

If equipped, memory seats allow two drivers to store and recall their unique seat positions for driving the vehicle, and a shared exit position for getting out of the vehicle. Other feature positions may also be set, such as power mirrors, if equipped. Memory positions are linked to RKE transmitter 1 or 2 for automatic memory recalls.

Before storing, adjust all available memory feature positions. Turn the ignition on and then press and release SET; a beep will sound. Then immediately press and hold 1,

2, or (Exit) on the driver door until two beeps sound. To manually recall these positions, press and hold 1, 2, or until the saved position is reached.

The vehicle identifies the current driver's RKE transmitter number (1–8). See *Remote Keyless Entry (RKE) System Operation* ⇨ *29*. Only RKE transmitters 1 and 2 can be used for automatic memory recalls. A Driver Information Center (DIC) welcome message indicating the transmitter number may display for the first few ignition cycles following a transmitter change. For Auto Memory Recall to work properly, save the positions to the memory button (1 or 2) matching the RKE transmitter number displayed in the DIC welcome message. Carry the linked RKE transmitter when entering the vehicle.

Vehicle Personalization Settings

- To have the Auto Memory Recall movement begin when the vehicle is started, select the Settings menu, then Vehicle, then Comfort and Convenience, and then Auto Memory Recall. Select On or Off. See "Auto Memory Recall" later in this section.
- To begin Easy Exit Recall movement when the ignition is turned off and the driver door is opened, or when the ignition is turned off with the driver door already opened, select the Settings menu, then Vehicle, then Comfort and Convenience, and then Easy Exit Options. Select On or Off. See "Easy Exit Recall" later in this section.
- See *Vehicle Personalization* ⇨ *142* for additional setting information.

Identifying Driver Number

To identify the driver number:

1. Start the vehicle with the other key or RKE transmitter. The DIC should display the driver number; 1 or 2. Turn the ignition off and remove the key or RKE transmitter from the vehicle.
2. Start the vehicle with the initial key or RKE transmitter. The DIC should display the other driver number not shown in step 1.

Saving Memory Positions

Read these instructions completely before saving memory positions.

To save preferred driving positions 1 and 2:

1. Turn the ignition on or to ACC/ACCESSORY.

   A DIC welcome message may be displayed indicating number 1 or 2 for memory recalls.
2. Adjust all available memory features to the desired driving position.
3. Press and release SET; a beep will sound.
4. Immediately press and hold the 1 or 2 memory button matching the above DIC welcome message until two beeps sound.

If too much time passes between releasing SET and pressing 1, the memory position will not be saved and two beeps will not sound. Repeat Steps 3 and 4.

1 or 2 corresponds to the driver number. See “Identifying Driver Number” in this section.

5. Repeat Steps 1–4 for a second driver using 1 or 2.

To save the position for and easy exit features, repeat Steps 1–4 using . This stores the position for getting out of the vehicle.

Save preferred memory feature positions to both 1 and 2 if you are the only driver.

Manually Recalling Memory Positions

Press and hold 1, 2, or to recall the previously stored memory positions.

To stop manual recall movement, release 1, 2, or . Recall can also be stopped by pressing a power seat, SET, or power mirror control, if memory equipped. The driver or passenger side mirror must be selected.

Auto Memory Recall

The vehicle identifies the number of the current driver’s RKE transmitter (1–8). See *Remote Keyless Entry (RKE) System Operation* ⇨ *29*. If the RKE transmitter is 1 or 2, and Auto Memory Recall is programmed on in vehicle personalization, the positions saved to the same memory button number 1 or 2 are automatically recalled when the ignition is turned on, or turned from off to ACC/ACCESSORY. RKE transmitters 3–8 will not provide automatic memory recalls.

To turn Auto Memory Recall on or off, see "Vehicle Personalization Settings" previously in this section and *Vehicle Personalization* ⇨ *142*.

The transmission must be in P (Park) to initiate Auto Memory Recall. Auto Memory Recall will complete if the vehicle is shifted out of P (Park) prior to reaching the stored memory position.

To stop Auto Memory Recall movement, turn the ignition off or press any of the following memory controls:

- Power seat
- Memory SET, 1, 2, or
- Power mirror, with the driver or passenger side mirror selected

If the stored memory seat position does not automatically recall or recalls to the wrong positions, the driver’s RKE transmitter number (1 or 2) may not match the memory button number that positions were saved to. Try storing the position to the other memory button or try the other RKE transmitter.

Easy Exit Recall

Easy Exit Recall is not linked to an RKE transmitter. The position stored to is used for all drivers. To turn Easy Exit Recall on or off, see

"Vehicle Personalization Settings" previously in this section and *Vehicle Personalization* ⇨ *142*.

If turned on, the position saved to is automatically recalled when one of the following occurs:

- The vehicle is turned off and the driver door is opened within a short time.
- The vehicle is turned off with the driver door open.

To stop Easy Exit Recall movement, press any of the following memory controls:

- Power seat
- Memory SET, 1, 2, or
- Power mirror, with the driver or passenger side mirror selected

Obstructions

If something has blocked the driver seat while recalling a memory position, the recall may stop. Remove the obstruction and try the recall again. If the memory position still does not recall, see your dealer for service.

Heated and Ventilated Front Seats

⚠ Warning

If temperature change or pain to the skin cannot be felt, the seat heater may cause burns. To reduce the risk of burns, use care when using the seat heater, especially for long periods of time. Do not place anything on the seat that insulates against heat, such as a blanket, cushion, cover, or similar item. This may cause the seat heater to overheat. An overheated seat heater may cause a burn or may damage the seat.

If equipped, the buttons are on the center console. To operate, the engine must be running.

Press or , if equipped, to heat the driver or passenger seatback only.

Press or to heat the driver or passenger cushion and seatback.

Press or , if equipped, to ventilate the driver or passenger seat. A ventilated seat has a fan that pulls or pushes air through the seat. The air is not cooled.

Press the button once for the highest setting. With each press of the button, the seat will change to the next lower setting, and then to the off setting. The indicator lights next to the buttons indicate three for the highest setting and one for the lowest.

Remote Start Heated and Ventilated Seats

During a remote start, the heated or ventilated seats, if equipped, can be turned on automatically. When it is cold outside, the heated seats turn on, and when it is hot outside the ventilated seats turn on. The heated or ventilated seats are canceled when the ignition is turned on. Press the heated or ventilated seat button to use the heated or ventilated seats after the vehicle is started.

The heated or ventilated seat indicator lights do not turn on during a remote start.

The temperature performance of an unoccupied seat may be reduced. This is normal.

The remote start heated or ventilated seats may be enabled or disabled in the vehicle personalization menu.
See *Remote Vehicle Start* ⇨ *35* and *Vehicle Personalization* ⇨ *142*.

Folding Seatback

The front passenger seatback folds flat.

⚠ Warning

If you fold the seatback forward to carry longer objects, such as skis, be sure any such cargo is not near an airbag. In a crash, an inflating airbag might force that object toward a person. This could cause severe injury or even death. Secure objects away from the area in which an airbag would inflate. For more information, see *Where Are the Airbags?* ⇨ *78* and *Vehicle Load Limits* ⇨ *181*.

⚠ Warning

Things you put on this seatback can strike and injure people in a sudden stop or turn, or in a crash. Remove or secure all items before driving.

To fold the seatback:

1. Lower the head restraint all the way. See *Head Restraints* ⇨ *56*.
2. Move the seat as far back as possible. See *Seat Adjustment* ⇨ *58*.

3. Lift the lever fully and fold the seatback forward.

   If necessary, move the seat belt out of the way to access the lever.

4. Continue lowering the seatback until it is completely folded and locks in place.

To raise the seatback:

1. Lift the lever fully to unlock the seatback. Then, raise the seatback and push it rearward until it re-engages.
2. Push and pull on the seatback to make sure it is locked in place.

⚠ Warning

If either seatback is not locked, it could move forward in a sudden stop or crash. That could cause injury to the person sitting there. Always push and pull on the seatbacks to be sure they are locked.

Rear Seats

Rear Seat Reminder

If equipped, the message REAR SEAT REMINDER LOOK IN REAR SEAT displays under certain conditions indicating there may be an item or passenger in the rear seat. Check before exiting the vehicle.

This feature will activate when a second row door is opened while the vehicle is on or up to 10 minutes before the vehicle is turned on. There will be an alert when the vehicle is turned off. The alert does not directly detect objects in the rear seat; instead, under certain conditions, it detects when a rear door is opened and closed, indicating that there may be something in the rear seat.

The feature is active only once each time the vehicle is turned on and off, and will require reactivation by opening and closing the second row doors. There may be an alert even when there is nothing in the rear seat; for example, if a child entered

the vehicle through the rear door and left the vehicle without the vehicle being shut off.

The feature can be turned on or off. See *Vehicle Personalization* ⇨ *142*.

Reclining the Seatback

To recline the seatback:

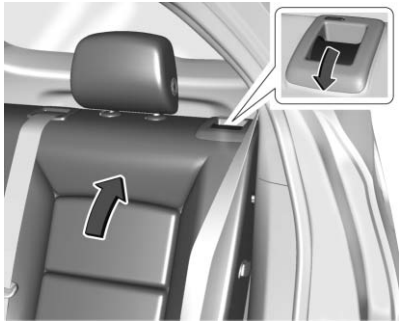

1. Pull the reclining seatback handle.
2. Move the seatback to the desired position, and then release the handle to lock the seatback in place.
3. Push and pull on the seatback to make sure it is locked.

Folding the Seatback

Either side of the seatback can be folded for more cargo space. Fold a seatback only when the vehicle is not moving.

Caution
Folding a rear seat with the seat belts still fastened may cause damage to the seat or the seat belts. Always unbuckle the seat belts and return them to their normal stowed position before folding a rear seat.

To fold the seatback:

1. Fold the head restraint. See *Head Restraints* ⇨ *56*.

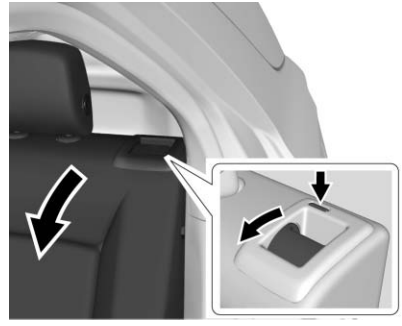

2. Pull the handle on top of the seatback to unlock it.

   A tab near the seatback lever raises when the seatback is unlocked.
3. Fold the seatback forward.

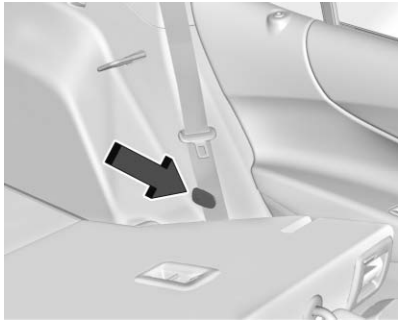

4. Stow the seat belt in the belt stowage clip.

   Repeat the steps to fold the other seatback, if desired.

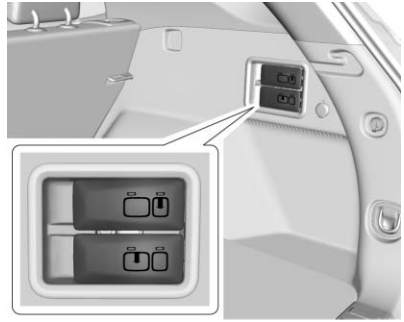

If equipped, the rear seatbacks can also be folded forward by pulling the levers on the passenger side of the rear cargo area.

Raising the Seatback

⚠ Warning

If either seatback is not locked, it could move forward in a sudden stop or crash. That could cause injury to the person sitting there. Always push and pull on the seatbacks to be sure they are locked.

⚠ Warning

A seat belt that is improperly routed, not properly attached, or twisted will not provide the protection needed in a crash. The person wearing the belt could be seriously injured. After raising the rear seatback, always check to be sure that the seat belts are properly routed and attached, and are not twisted.

To raise a seatback:

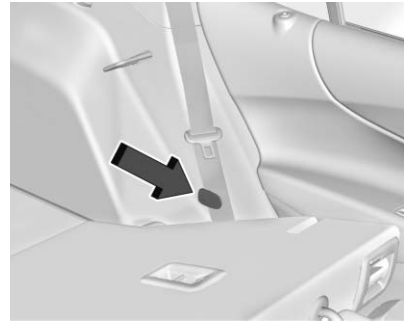

1. Ensure the seat belt is in the belt stowage clip.
2. Lift the seatback up and push it rearward to lock it in place.

   A tab near the seatback lever retracts when the seatback is locked in place.
3. Return the head restraint to the upright position. See *Head Restraints* ⇨ *56*.
4. Push and pull the top of the seatback to be sure it is locked into position.
5. Repeat the steps to raise the other seatback, if necessary.

When the seat is not in use, it should be kept in the upright, locked position.

Heated Rear Seats

⚠ Warning

If temperature change or pain to the skin cannot be felt, the seat heater may cause burns. To reduce the risk of burns, use care when using the seat heater, especially for long periods of time. Do not place anything on the seat that insulates against heat, such as a blanket, cushion, cover, or similar item. This may cause the seat heater to overheat. An overheated seat heater may cause a burn or may damage the seat.

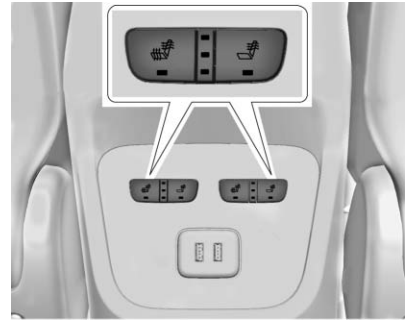

If equipped, the rear heated seat buttons are on the rear of the center console.

Press to heat the left or right outboard seat cushion and seatback.

Press to heat the left or right outboard seatback only.

Press the button once for the highest setting. With each press of the button, the heated seat will change to the next lower setting, and then to the off setting. The lights indicate three for the highest setting and one for the lowest.

Seat Belts

This section describes how to use seat belts properly, and some things not to do.

⚠ Warning

Do not let anyone ride where a seat belt cannot be worn properly. In a crash, if you or your passenger(s) are not wearing seat belts, injuries can be much worse than if you are wearing seat belts. You can be seriously injured or killed by hitting things inside the vehicle harder or by being ejected from the vehicle. In addition, anyone who is not buckled up can strike other passengers in the vehicle.

It is extremely dangerous to ride in a cargo area, inside or outside of a vehicle. In a collision, passengers riding in these areas are more likely to be seriously injured or killed. Do not allow

(Continued)

Warning (Continued)

passengers to ride in any area of the vehicle that is not equipped with seats and seat belts.

Always wear a seat belt, and check that all passenger(s) are restrained properly too.

This vehicle has indicators as a reminder to buckle the seat belts. See *Seat Belt Reminders* ⇨ *125*.

Why Seat Belts Work

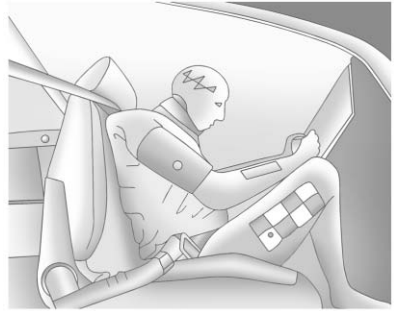

When riding in a vehicle, you travel as fast as the vehicle does. If the vehicle stops suddenly, you keep going until something stops you. It could be the windshield, the instrument panel, or the seat belts!

When you wear a seat belt, you and the vehicle slow down together. There is more time to stop because you stop over a longer distance and, when worn properly, your strongest bones take the forces from the seat belts. That is why wearing seat belts makes such good sense.

Questions and Answers About Seat Belts

Q: Will I be trapped in the vehicle after a crash if I am wearing a seat belt?

A: You *could* be — whether you are wearing a seat belt or not. Your chance of being conscious during and after a crash, so you *can* unbuckle and get out, is *much* greater if you are belted.

Q: If my vehicle has airbags, why should I have to wear seat belts?

A: Airbags are supplemental systems only. They work *with* seat belts — not instead of them. Whether or not an airbag is provided, all occupants still have to buckle up to get the most protection.

Also, in nearly all states and in all Canadian provinces, the law requires wearing seat belts.

How to Wear Seat Belts Properly

This section is only for people of adult size.

There are special things to know about seat belts and children, and there are different rules for smaller children and infants. If a child will be riding in the vehicle, see *Older Children* ⇨ *88* or *Infants and Young Children* ⇨ *90*. Follow those rules for everyone's protection.

It is very important for all occupants to buckle up. Statistics show that unbelted people are hurt more often in crashes than those who are wearing seat belts.

There are important things to know about wearing a seat belt properly.

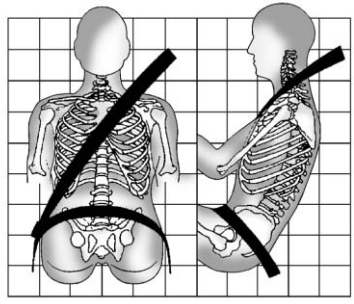

- Sit up straight and always keep your feet on the floor in front of you.
- Always use the correct buckle for your seating position.
- Wear the lap part of the belt low and snug on the hips, just touching the thighs. In a crash, this applies force to the strong pelvic bones and you would be less likely to slide under the lap belt. If you slid under it, the belt would apply force on your abdomen. This could cause serious or even fatal injuries.
- Wear the shoulder belt over the shoulder and across the chest. These parts of the body are best able to take belt restraining forces. The shoulder belt locks if there is a sudden stop or crash.

⚠ Warning

You can be seriously injured, or even killed, by not wearing your seat belt properly.

- Never allow the lap or shoulder belt to become loose or twisted.
- Never wear the shoulder belt under both arms or behind your back.
- Never route the lap or shoulder belt over an armrest.

Lap-Shoulder Belt

All seating positions in the vehicle have a lap-shoulder belt.

The following instructions explain how to wear a lap-shoulder belt properly.

1. Adjust the seat, if the seat is adjustable, so you can sit up straight. To see how, see “Seats” in the Index.

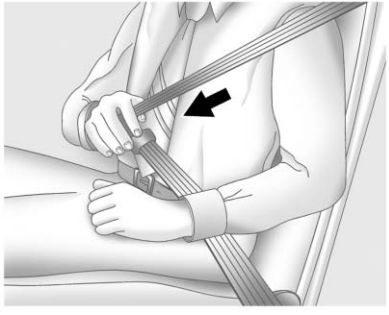

2. Pick up the latch plate and pull the belt across you. Do not let it get twisted.

The lap-shoulder belt may lock if you pull the belt across you very quickly. If this happens, let the belt go back slightly to unlock it. Then pull the belt across you more slowly.

If the shoulder portion of a passenger belt is pulled out all the way, the child restraint locking feature may be engaged. If this happens, let the belt go back all the way and start again.

Engaging the child restraint locking feature in the front outboard seating position may affect the passenger sensing system. See *Passenger Sensing System* ⇨ *82*.

If the webbing locks in the latch plate before it reaches the buckle, tilt the latch plate flat to unlock.

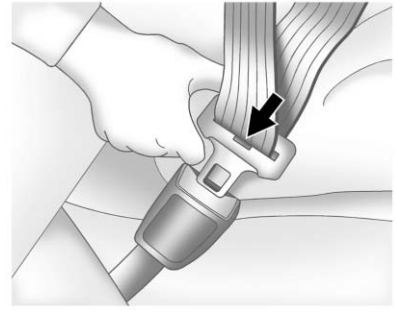

3. Push the latch plate into the buckle until it clicks.

   Pull up on the latch plate to make sure it is secure. If the belt is not long enough, see *Seat Belt Extender* ⇨ *74*.

   Position the release button on the buckle so that the seat belt could be quickly unbuckled if necessary.

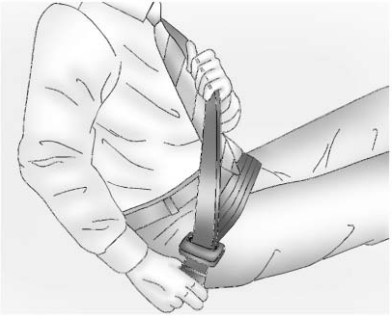

4. To make the lap part tight, pull up on the shoulder belt.

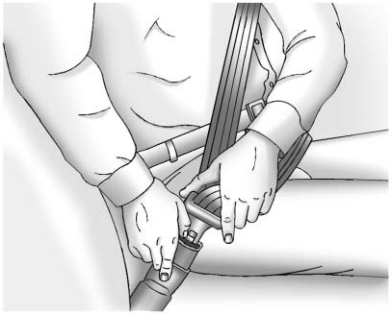

To unlatch the belt, push the button on the buckle. The belt should return to its stowed position.

Always stow the seat belt slowly. If the seat belt webbing returns quickly to the stowed position, the retractor may lock and cannot be pulled out. If this happens, pull the seat belt straight out firmly to unlock the webbing, and then release it. If the webbing is still locked in the retractor, see your dealer.

Before a door is closed, be sure the seat belt is out of the way. If a door is slammed against a seat belt, damage can occur to both the seat belt and the vehicle.

Seat Belt Pretensioners

This vehicle has seat belt pretensioners for front outboard occupants. Although the seat belt pretensioners cannot be seen, they are part of the seat belt assembly. They can help tighten the seat belts during the early stages of a moderate to severe frontal, near frontal, or rear crash if the threshold conditions for pretensioner activation are met. Seat belt pretensioners can also help tighten the seat belts in a side crash or a rollover event.

Pretensioners work only once. If the pretensioners activate in a crash, the pretensioners and probably other parts of the vehicle's seat belt system will need to be replaced. See *Replacing Seat Belt System Parts after a Crash* ⇨ *75*.

Do not sit on the outboard seat belt while entering or exiting the vehicle, or at any time while sitting in the seat. Sitting on the seat belt can damage the webbing and hardware.

Rear Seat Belt Comfort Guides

⚠ Warning

A seat belt that is not properly worn may not provide the protection needed in a crash. The person wearing the belt could be seriously injured. The shoulder belt should go over the shoulder and across the chest. These parts of the body are best able to take belt restraining forces.

Rear seat belt comfort guides may provide added seat belt comfort for older children who have outgrown booster seats and for some adults. When installed on a shoulder belt, the comfort guide positions the shoulder belt away from the neck and head.

This vehicle will have rear seat belt comfort guides in the rear outboard seating positions.

To install:

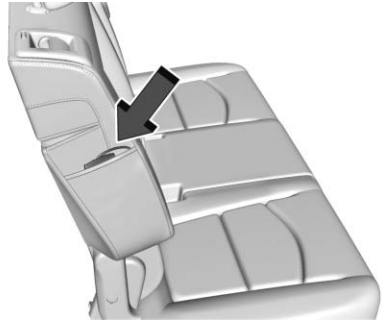

1. Remove the guide from its storage pocket on the side of the seatback.

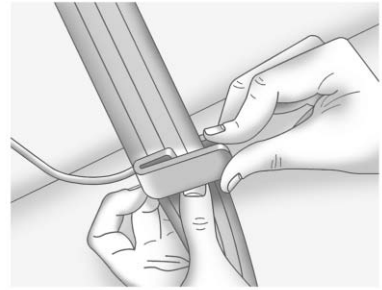

2. Place the guide over the belt, and insert the two edges of the belt into the slots of the guide.

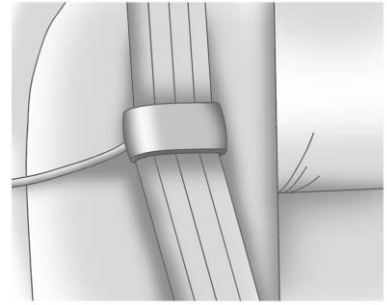

3. Be sure that the belt is not twisted and it lies flat. The elastic cord must be behind the belt with the plastic guide on the front.

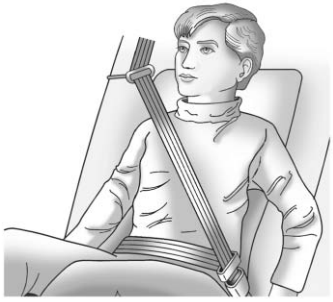

4. Buckle, position, and release the seat belt as described previously in this section. Make sure the shoulder belt crosses the shoulder. The belt should be close to, but not contacting, the neck.

To remove and store the comfort guide, squeeze the belt edges together so that the seat belt can be removed from the guide. Slide the guide back into its storage pocket on the side of the seatback.

Seat Belt Use During Pregnancy

Seat belts work for everyone, including pregnant women. Like all occupants, they are more likely to be seriously injured if they do not wear seat belts.

A pregnant woman should wear a lap-shoulder belt, and the lap portion should be worn as low as possible, below the rounding, throughout the pregnancy.

The best way to protect the fetus is to protect the mother. When a seat belt is worn properly, it is more likely that the fetus will not be hurt in a crash. For pregnant women, as for anyone, the key to making seat belts effective is wearing them properly.

Seat Belt Extender

If the vehicle's seat belt will fasten around you, you should use it.

But if a seat belt is not long enough, your dealer will order you an extender. When you go in to order it, take the heaviest coat you will wear, so the extender will be long enough for you. To help avoid personal injury, do not let someone else use it, and use it only for the seat it is made to fit. The extender has been designed for adults. Never use it for securing child restraints. For more

information on the proper use and fit of seat belt extenders see the instruction sheet that comes with the extender.

Safety System Check

Periodically check the seat belt reminder, seat belts, buckles, latch plates, retractors, shoulder belt height adjusters (if equipped), and seat belt anchorages to make sure they are all in working order. Look for any other loose or damaged seat belt system parts that might keep a seat belt system from performing properly. See your dealer to have it repaired. Torn or frayed seat belts may not protect you in a crash. They can rip apart under impact forces. If a belt is torn or frayed, have it replaced immediately.

Make sure the seat belt reminder light is working. See *Seat Belt Reminders* ⇨ *125*.

Keep seat belts clean and dry. See *Seat Belt Care* ⇨ *75*.

Seat Belt Care

Keep belts clean and dry.

⚠ Warning

Do not bleach or dye seat belt webbing. It may severely weaken the webbing. In a crash, they might not be able to provide adequate protection. Clean and rinse seat belt webbing only with mild soap and lukewarm water. Allow the webbing to dry.

Seat belts should be properly cared for and maintained.

Seat belt hardware should be kept dry and free of dust or debris. As necessary exterior hard surfaces and seat belt webbing may be lightly cleaned with mild soap and water. Ensure there is not excessive dust or debris in the mechanism. If dust or debris exists in the system please see the dealer. Parts may need to be replaced to ensure proper functionality of the system.

Replacing Seat Belt System Parts after a Crash

⚠ Warning

A crash can damage the seat belt system in the vehicle. A damaged seat belt system may not properly protect the person using it, resulting in serious injury or even death in a crash. To help make sure the seat belt systems are working properly after a crash, have them inspected and any necessary replacements made as soon as possible.

After a minor crash, replacement of seat belts may not be necessary. But the seat belt assemblies that were used during any crash may have been stressed or damaged. See your dealer to have the seat belt assemblies inspected or replaced.

New parts and repairs may be necessary even if the seat belt system was not being used at the time of the crash.

Have the seat belt pretensioners checked if the vehicle has been in a crash, or if the airbag readiness light stays on after you start the vehicle or while you are driving. See *Airbag Readiness Light* ⇨ *126*.

Airbag System

The vehicle has the following airbags:

- A frontal airbag for the driver
- A frontal airbag for the front outboard passenger
- A seat-mounted side impact airbag for the driver
- A seat-mounted side impact airbag for the front outboard passenger
- A roof-rail airbag for the driver and the passenger seated directly behind the driver
- A roof-rail airbag for the front outboard passenger and the passenger seated directly behind the front outboard passenger

All vehicle airbags have the word AIRBAG on the trim or on a label near the deployment opening.

For frontal airbags, the word AIRBAG is on the center of the steering wheel for the driver and on the instrument panel for the front outboard passenger.

For seat-mounted side impact airbags, the word AIRBAG is on the side of the seat closest to the door.

For roof-rail airbags, the word AIRBAG is on the ceiling or trim.

Airbags are designed to supplement the protection provided by seat belts. Even though today's airbags are also designed to help reduce the risk of injury from the force of an inflating bag, all airbags must inflate very quickly to do their job.

Here are the most important things to know about the airbag system:

⚠ Warning

You can be severely injured or killed in a crash if you are not wearing your seat belt, even with airbags. Airbags are designed to

(Continued)

Warning (Continued)

work with seat belts, not replace them. Also, airbags are not designed to inflate in every crash. In some crashes seat belts are the only restraint. See *When Should an Airbag Inflate?* ⇨ *79*.

Wearing your seat belt during a crash helps reduce your chance of hitting things inside the vehicle or being ejected from it. Airbags are “supplemental restraints” to the seat belts. Everyone in the vehicle should wear a seat belt properly, whether or not there is an airbag for that person.

⚠ Warning

Because airbags inflate with great force and faster than the blink of an eye, anyone who is up against, or very close to, any airbag when it inflates can be

(Continued)

Warning (Continued)

seriously injured or killed. Do not sit unnecessarily close to any airbag, as you would be if sitting on the edge of the seat or leaning forward. Seat belts help keep you in position before and during a crash. Always wear a seat belt, even with airbags. The driver should sit as far back as possible while still maintaining control of the vehicle. The seat belts and the front outboard passenger airbags are most effective when you are sitting well back and upright in the seat with both feet on the floor.

Occupants should not lean on or sleep against the door or side windows in seating positions with seat-mounted side impact airbags and/or roof-rail airbags.

⚠ Warning

Children who are up against, or very close to, any airbag when it inflates can be seriously injured or killed. Always secure children properly in the vehicle. To read how, see *Older Children* ⇨ *88* or *Infants and Young Children* ⇨ *90*.

There is an airbag readiness light on the instrument cluster, which shows the airbag symbol.

The system checks the airbag electrical system for malfunctions. The light tells you if there is an electrical problem. See *Airbag Readiness Light* ⇨ *126*.

Where Are the Airbags?

The driver frontal airbag is in the center of the steering wheel.

The front outboard passenger frontal airbag is in the passenger side instrument panel.

Driver Side Shown, Passenger Side Similar

The driver and front outboard passenger seat-mounted side impact airbags are in the side of the seatbacks closest to the door.

Driver Side Shown, Passenger Side Similar

The roof-rail airbags for the driver, front outboard passenger, and second row outboard passengers are in the ceiling above the side windows.

⚠ Warning

If something is between an occupant and an airbag, the airbag might not inflate properly or it might force the object into that person causing severe injury

(Continued)

Warning (Continued)

or even death. The path of an inflating airbag must be kept clear. Do not put anything between an occupant and an airbag, and do not attach or put anything on the steering wheel hub or on or near any other airbag covering.

Do not use seat accessories that block the inflation path of a seat-mounted side impact airbag.

Never secure anything to the roof of a vehicle with roof-rail airbags by routing a rope or tie-down through any door or window opening. If you do, the path of an inflating roof-rail airbag will be blocked.

When Should an Airbag Inflate?

This vehicle is equipped with airbags. See *Airbag System* ⇨ *76*. Airbags are designed to inflate if the impact exceeds the specific airbag system's deployment threshold. Deployment thresholds are used to predict how severe a crash is likely to be in time for the airbags to inflate and help restrain the occupants. The vehicle has electronic sensors that help the airbag system determine the severity of the impact. Deployment thresholds can vary with specific vehicle design.

Frontal airbags are designed to inflate in moderate to severe frontal or near frontal crashes to help reduce the potential for severe injuries, mainly to the driver's or front outboard passenger's head and chest.

Whether the frontal airbags will or should inflate is not based primarily on how fast the vehicle is traveling. It depends on what is hit, the direction of the impact, and how quickly the vehicle slows down.

Frontal airbags may inflate at different crash speeds depending on whether the vehicle hits an object straight on or at an angle, and

whether the object is fixed or moving, rigid or deformable, narrow or wide.

Frontal airbags are not intended to inflate during vehicle rollovers, rear impacts, or many side impacts.

In addition, the vehicle has advanced technology frontal airbags. Advanced technology frontal airbags adjust the restraint according to crash severity.

Seat-mounted side impact airbags are designed to inflate in moderate to severe side crashes depending on the location of the impact. Seat-mounted side impact airbags are not designed to inflate in frontal impacts, near frontal impacts, rollovers, or rear impacts.
A seat-mounted side impact airbag is designed to inflate on the side of the vehicle that is struck.

Roof-rail airbags are designed to inflate in moderate to severe side crashes depending on the location of the impact. In addition, these roof-rail airbags are designed to inflate during a rollover or in a severe frontal impact. Roof-rail airbags are not designed to inflate in rear impacts. Both roof-rail airbags will inflate when either side of the vehicle is struck or if the sensing system predicts that the vehicle is about to roll over on its side, or in a severe frontal impact.

In any particular crash, no one can say whether an airbag should have inflated simply because of the vehicle damage or repair costs.

What Makes an Airbag Inflate?

In a deployment event, the sensing system sends an electrical signal triggering a release of gas from the inflator. Gas from the inflator fills the airbag causing the bag to break out of the cover. The inflator, the airbag, and related hardware are all part of the airbag module.

For airbag locations, see *Where Are the Airbags?* ⇨ *78*.

How Does an Airbag Restrain?

In moderate to severe frontal or near frontal collisions, even belted occupants can contact the steering wheel or the instrument panel. In moderate to severe side collisions, even belted occupants can contact the inside of the vehicle.

Airbags supplement the protection provided by seat belts by distributing the force of the impact more evenly over the occupant's body.

Rollover capable roof-rail airbags are designed to help contain the head and chest of occupants in the outboard seating positions in the first and second rows. The rollover capable roof-rail airbags are designed to help reduce the risk of full or partial ejection in rollover events, although no system can prevent all such ejections.

But airbags would not help in many types of collisions, primarily because the occupant's motion is not toward those airbags. See *When Should an Airbag Inflate?* ⇨ *79*.

Airbags should never be regarded as anything more than a supplement to seat belts.

What Will You See after an Airbag Inflates?

After frontal and seat-mounted side impact airbags inflate, they quickly deflate, so quickly that some people may not even realize the airbags inflated. Roof-rail airbags may still be at least partially inflated for some time after they inflate. Some components of the airbag module may be hot for several minutes. For location of the airbags, see *Where Are the Airbags?* ⇨ *78*.

The parts of the airbag that come into contact with you may be warm, but not too hot to touch. There may be some smoke and dust coming from the vents in the deflated airbags. Airbag inflation does not prevent the driver from seeing out of the windshield or being able to steer the vehicle, nor does it prevent people from leaving the vehicle.

⚠ Warning

When an airbag inflates, there may be dust in the air. This dust could cause breathing problems for people with a history of asthma or other breathing trouble. To avoid this, everyone in the vehicle should get out as soon as it is safe to do so. If you have breathing problems but cannot get out of the vehicle after an airbag inflates, then get fresh air by opening a window or a door. If you experience breathing problems following an airbag deployment, you should seek medical attention.

The vehicle has a feature that may automatically unlock the doors, turn on the interior lamps and hazard warning flashers, and shut off the fuel system after the airbags inflate. The feature may also activate, without airbag inflation, after an event that exceeds a predetermined threshold. After turning the ignition off and then on again, the fuel system will return to normal operation; the doors can be locked, the interior lamps can be turned off, and the hazard warning flashers can be turned off using the controls for those features. If any of these systems are damaged in the crash they may not operate as normal.

⚠ Warning

A crash severe enough to inflate the airbags may have also damaged important functions in the vehicle, such as the fuel system, brake and steering systems, etc. Even if the vehicle appears to be drivable after a moderate crash, there may be concealed damage that could make it difficult to safely operate the vehicle.

(Continued)

Warning (Continued)

Use caution if you should attempt to restart the engine after a crash has occurred.

In many crashes severe enough to inflate the airbag, windshields are broken by vehicle deformation. Additional windshield breakage may also occur from the front outboard passenger airbag.

- Airbags are designed to inflate only once. After an airbag inflates, you will need some new parts for the airbag system. If you do not get them, the airbag system will not be there to help protect you in another crash. A new system will include airbag modules and possibly other parts. The service manual for the vehicle covers the need to replace other parts.
- The vehicle has a crash sensing and diagnostic module which records information after a crash. See *Vehicle Data Recording and Privacy* ⇨ *381* and *Event Data Recorders* ⇨ *381*.
- Let only qualified technicians work on the airbag systems. Improper service can mean that an airbag system will not work properly. See your dealer for service.

Passenger Sensing System

The vehicle has a passenger sensing system for the front outboard passenger position. The passenger airbag status indicator will light on the overhead console when the vehicle is started.

The words ON and OFF will be visible during the system check. When the system check is complete, either the word ON or OFF will be visible. See *Passenger Airbag Status Indicator* ⇨ *126*.

The passenger sensing system turns off the front outboard passenger frontal airbag under certain conditions. No other airbag is affected by the passenger sensing system.

The passenger sensing system works with sensors that are part of the front outboard passenger seat and seat belt. The sensors are designed to detect the presence of a properly seated occupant and determine if the front outboard passenger frontal airbag should be allowed to inflate or not.

According to accident statistics, children are safer when properly secured in a rear seat in the correct child restraint for their weight and size.

Whenever possible, children aged 12 and under should be secured in a rear seating position.

Never put a rear-facing child seat in the front. This is because the risk to the rear-facing child is so great, if the airbag inflates.

⚠ Warning

A child in a rear-facing child restraint can be seriously injured or killed if the passenger frontal airbag inflates. This is because the back of the rear-facing child restraint would be very close to the inflating airbag. A child in a forward-facing child restraint can be seriously injured or killed if the passenger frontal airbag inflates and the passenger seat is in a forward position.

Even if the passenger sensing system has turned off the passenger frontal airbag, no system is fail-safe. No one can guarantee that an airbag will not deploy under some unusual circumstance, even though the airbag is turned off.

(Continued)

Warning (Continued)

Never put a rear-facing child restraint in the front seat, even if the airbag is off. If securing a forward-facing child restraint in the front outboard passenger seat, always move the seat as far back as it will go. It is better to secure child restraints in the rear seat. Consider using another vehicle to transport the child when a rear seat is not available.

The passenger sensing system is designed to turn off the front outboard passenger frontal airbag if:

- The front outboard passenger seat is unoccupied.
- The system determines an infant is present in a child restraint.
- A front outboard passenger takes his/her weight off of the seat for a period of time.
- There is a critical problem with the airbag system or the passenger sensing system.

When the passenger sensing system has turned off the front outboard passenger frontal airbag, the off indicator will light and stay lit as a reminder that the airbag is off. See *Passenger Airbag Status Indicator* ⇨ *126*.

The passenger sensing system is designed to turn on the front outboard passenger frontal airbag anytime the system senses that a person of adult size is sitting properly in the front outboard passenger seat.

When the passenger sensing system has allowed the airbag to be enabled, the on indicator will light and stay lit as a reminder that the airbag is active.

For some children, including children in child restraints, and for very small adults, the passenger sensing system may or may not turn off the front outboard passenger frontal airbag, depending upon the person's seating posture and body build. Everyone in the vehicle who has outgrown child restraints should

wear a seat belt properly — whether or not there is an airbag for that person.

⚠ Warning

If the airbag readiness light ever comes on and stays on, it means that something may be wrong with the airbag system. To help avoid injury to yourself or others, have the vehicle serviced right away. See *Airbag Readiness Light* ⇨ *126* for more information, including important safety information.

If the On Indicator Is Lit for a Child Restraint

The passenger sensing system is designed to turn off the front outboard passenger frontal airbag if the system determines that an infant is present in a child restraint. If a child restraint has been installed and the on indicator is lit:

1. Turn the vehicle off.
2. Remove the child restraint from the vehicle.
3. Remove any additional items from the seat such as blankets, cushions, seat covers, seat heaters, or seat massagers.
4. Reinstall the child restraint following the directions provided by the child restraint manufacturer and refer to *Securing Child Restraints (With the Seat Belt in the Rear Seat)* ⇨ *101* or *Securing Child Restraints (With the Seat Belt in the Front Seat)* ⇨ *103*.

   Make sure the seat belt retractor is locked by pulling the shoulder belt all the way out of the retractor when installing the child restraint, even if the child restraint is equipped with a seat belt lock off. When the retractor lock is set, the belt can be tightened but not pulled out of the retractor.
5. If, after reinstalling the child restraint and restarting the vehicle, the on indicator is still lit, turn the vehicle off. Then slightly recline the vehicle seatback and adjust the seat cushion, if adjustable, to make sure that the vehicle seatback is not pushing the child restraint into the seat cushion.

   Also make sure the child restraint is not trapped under the vehicle head restraint. If this happens, adjust the head restraint. See *Head Restraints* ⇨ *56*.
6. Restart the vehicle.

The passenger sensing system may or may not turn off the airbag for a child in a child restraint depending upon the child's size. It is better to secure the child restraint in a rear seat. Never put a rear-facing child restraint in the front seat, even if the on indicator is not lit.

If the Off Indicator Is Lit for an Adult-Sized Occupant

If a person of adult size is sitting in the front outboard passenger seat, but the off indicator is lit, it could be because that person is not sitting properly in the seat or that the child restraint locking feature is engaged. Use the following steps to allow the system to detect that person and enable the front outboard passenger frontal airbag:

1. Turn the vehicle off.
2. Remove any additional material from the seat, such as blankets, cushions, seat covers, seat heaters, or seat massagers.
3. Place the seatback in the fully upright position.
4. Have the person sit upright in the seat, centered on the seat cushion, with legs comfortably extended.
5. If the shoulder portion of the belt is pulled out all the way, the child restraint locking feature will be engaged. This may unintentionally cause the passenger sensing system to turn the airbag off for some adult-sized occupants. If this happens, unbuckle the belt, let the belt go back all the way, and then buckle the belt again without pulling the belt out all the way.
6. Restart the vehicle and have the person remain in this position for two to three minutes after the on indicator is lit.

⚠ Warning

If the front outboard passenger airbag is turned off for an adult-sized occupant, the airbag will not be able to inflate and help protect that person in a crash, resulting in an increased risk of serious injury or even death. An adult-sized occupant should not ride in the front outboard passenger seat, if the passenger airbag off indicator is lit.

Additional Factors Affecting System Operation

Seat belts help keep the passenger in position on the seat during vehicle maneuvers and braking, which helps the passenger sensing system maintain the passenger airbag status. See “Seat Belts” and “Child Restraints” in the Index for additional information about the importance of proper restraint use.

A thick layer of additional material, such as a blanket or cushion, or aftermarket equipment such as seat covers, seat heaters, and seat massagers can affect how well the passenger sensing system operates. We recommend that you not use seat covers or other aftermarket equipment except when approved by GM for your specific vehicle. See *Adding Equipment to the Airbag-Equipped Vehicle* ⇨ *86* for more information about modifications that can affect how the system operates.

The on indicator may be lit if an object, such as a briefcase, handbag, grocery bag, laptop, or other electronic device, is put on an unoccupied seat. If this is not desired, remove the object from the seat.

⚠ Warning

Stowing articles under the passenger seat or between the passenger seat cushion and

(Continued)

Warning (Continued)

seatback may interfere with the proper operation of the passenger sensing system.

Servicing the Airbag-Equipped Vehicle

Airbags affect how the vehicle should be serviced. There are parts of the airbag system in several places around the vehicle. Your dealer and the service manual have information about servicing the vehicle and the airbag system. To purchase a service manual, see *Service Publications Ordering Information* ⇨ *378*.

⚠ Warning

For up to 10 seconds after the vehicle is turned off and the battery is disconnected, an airbag can still inflate during improper service. You can be injured if you

(Continued)

Warning (Continued)

are close to an airbag when it inflates. Avoid yellow connectors. They are probably part of the airbag system. Be sure to follow proper service procedures, and make sure the person performing work for you is qualified to do so.

Adding Equipment to the Airbag-Equipped Vehicle

Adding accessories that change the vehicle's frame, bumper system, height, front end, or side sheet metal may keep the airbag system from working properly. The operation of the airbag system can also be affected by changing any parts of the front seats, seat belts, airbag sensing and diagnostic module, steering wheel, instrument panel, inner door seals including the speakers, any of the airbag modules, ceiling or pillar garnish trim, overhead console, front sensors, side impact sensors, or airbag wiring.

Your dealer and the service manual have information about the location of the airbag sensors, sensing and diagnostic module, and airbag wiring.

In addition, the vehicle has a passenger sensing system for the front outboard passenger position, which includes sensors that are part of the passenger seat. The passenger sensing system may not operate properly if the original seat trim is replaced with non-GM covers, upholstery, or trim; or with GM covers, upholstery, or trim designed for a different vehicle. Any object, such as an aftermarket seat heater or a comfort-enhancing pad or device, installed under or on top of the seat fabric, could also interfere with the operation of the passenger sensing system. This could either prevent proper deployment of the passenger airbag(s) or prevent the passenger sensing system from properly turning off the passenger airbag(s). See *Passenger Sensing System* ⇨ *82*.

If the vehicle has rollover roof-rail airbags, see *Different Size Tires and Wheels* ⇨ *317* for additional important information.

If you have to modify your vehicle because you have a disability and have questions about whether the modifications will affect the vehicle's airbag system, or if you have questions about whether the airbag system will be affected if the vehicle is modified for any other reason, call Customer Assistance. See *Customer Assistance Offices* ⇨ *371*.

Airbag System Check

The airbag system does not need regularly scheduled maintenance or replacement. Make sure the airbag readiness light is working. See *Airbag Readiness Light* ⇨ *126*.

Caution

If an airbag covering is damaged, opened, or broken, the airbag may not work properly. Do not

(Continued)

Caution (Continued)

open or break the airbag coverings. If there are any opened or broken airbag coverings, have the airbag covering and/or airbag module replaced. For the location of the airbags, see *Where Are the Airbags?* ⇨ *78*. See your dealer for service.

Replacing Airbag System Parts after a Crash

⚠ Warning

A crash can damage the airbag systems in the vehicle.
A damaged airbag system may not properly protect you and your passenger(s) in a crash, resulting in serious injury or even death. To help make sure the airbag systems are working properly after a crash, have them

(Continued)

Warning (Continued)

inspected and any necessary replacements made as soon as possible.

If an airbag inflates, you will need to replace airbag system parts. See your dealer for service.

If the airbag readiness light stays on after the vehicle is started or comes on when you are driving, the airbag system may not work properly. Have the vehicle serviced right away. See *Airbag Readiness Light* ⇨ *126*.

Child Restraints

Older Children

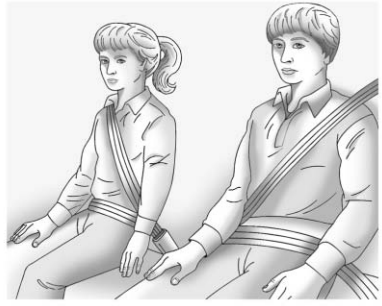

Older children who have outgrown booster seats should wear the vehicle's seat belts.

The manufacturer instructions that come with the booster seat state the weight and height limitations for that booster. Use a booster seat with a lap-shoulder belt until the child passes the fit test below:

- Sit all the way back on the seat. Do the knees bend at the seat edge? If yes, continue. If no, return to the booster seat.
- Buckle the lap-shoulder belt. Does the shoulder belt rest on the shoulder? If yes, continue. If no, try using the rear seat belt comfort guide, if available. See "Rear Seat Belt Comfort Guides" under *Lap-Shoulder Belt* ⇨ *71*. If a comfort guide is not available, or if the shoulder belt still does not rest on the shoulder, then return to the booster seat.
- Does the lap belt fit low and snug on the hips, touching the thighs? If yes, continue. If no, return to the booster seat.

- Can proper seat belt fit be maintained for the length of the trip? If yes, continue. If no, return to the booster seat.

Q: What is the proper way to wear seat belts?

A: An older child should wear a lap-shoulder belt and get the additional restraint a shoulder belt can provide. The shoulder belt should not cross the face or neck. The lap belt should fit snugly below the hips, just touching the top of the thighs. This applies belt force to the child's pelvic bones in a crash. It should never be worn over the abdomen, which could cause severe or even fatal internal injuries in a crash.

Also see “Rear Seat Belt Comfort Guides” under *Lap-Shoulder Belt* ⇨ *71*.

According to accident statistics, children are safer when properly restrained in a rear seating position. In a crash, children who are not buckled up can strike other people who are buckled up, or can be thrown out of the vehicle. Older children need to use seat belts properly.

⚠ Warning

Never allow more than one child to wear the same seat belt. The seat belt cannot properly spread the impact forces. In a crash, they can be crushed together and seriously injured. A seat belt must be used by only one person at a time.

⚠ Warning

Never allow a child to wear the seat belt with the shoulder belt behind their back. A child can be seriously injured by not wearing the lap-shoulder belt properly. In a crash, the child would not be restrained by the shoulder belt. The child could move too far forward increasing the chance of head and neck injury. The child might also slide under the lap belt. The belt force would then be applied right on the abdomen.

(Continued)

Warning (Continued)

That could cause serious or fatal injuries. The shoulder belt should go over the shoulder and across the chest.

Infants and Young Children

Everyone in a vehicle needs protection! This includes infants and all other children. Neither the distance traveled nor the age and size of the traveler changes the need, for everyone, to use safety restraints. In fact, the law in every state in the United States and in every Canadian province says children up to some age must be restrained while in a vehicle.

⚠ Warning

Children can be seriously injured or strangled if a shoulder belt is wrapped around their neck. The shoulder belt can tighten but cannot be loosened if it is locked. The shoulder belt locks when it is pulled all the way out of the retractor. It unlocks when the shoulder belt is allowed to go all the way back into the retractor, but it cannot do this if it is wrapped around a child's neck. If the shoulder belt is locked and tightened around a child's neck, the only way to loosen the belt is to cut it.

(Continued)

Warning (Continued)

Never leave children unattended in a vehicle and never allow children to play with the seat belts.

Every time infants and young children ride in vehicles, they should have the protection provided by appropriate child restraints. Neither the vehicle's seat belt system nor its airbag system is designed for them.

Children who are not restrained properly can strike other people, or can be thrown out of the vehicle.

⚠ Warning

Never hold an infant or a child while riding in a vehicle. Due to crash forces, an infant or a child will become so heavy it is not possible to hold it during a crash. For example, in a crash at only 40 km/h (25 mph), a 5.5 kg (12 lb)

(Continued)

Warning (Continued)

infant will suddenly become a 110 kg (240 lb) force on a person's arms. An infant or child should be secured in an appropriate restraint.

⚠ Warning

Children who are up against, or very close to, any airbag when it inflates can be seriously injured

(Continued)

Warning (Continued)

or killed. Never put a rear-facing child restraint in the front outboard seat. Secure a rear-facing child restraint in a rear seat. It is also better to secure a forward-facing child restraint in a rear seat. If you must secure a forward-facing child restraint in the front outboard seat, always move the front passenger seat as far back as it will go.

Child restraints are devices used to restrain, seat, or position children in the vehicle and are sometimes called child seats or car seats.

There are three basic types of child restraints:

- Forward-facing child restraints
- Rearward-facing child restraints
- Belt-positioning booster seats

The proper child restraint for your child depends on their size, weight, and age, and also on whether the child restraint is compatible with the vehicle in which it will be used.

For each type of child restraint, there are many different models available. When purchasing a child restraint, be sure it is designed to be used in a motor vehicle. If it is, the restraint will have a label saying that it meets federal motor vehicle safety standards. The restraint manufacturer's instructions that come with the restraint state the weight and height limitations for a particular child restraint. In addition,

there are many kinds of restraints available for children with special needs.

⚠ Warning

To reduce the risk of neck and head injury in a crash, infants and toddlers should be secured in a rear-facing child restraint until age two, or until they reach the maximum height and weight limits of their child restraint.

⚠ Warning

A young child's hip bones are still so small that the vehicle's regular seat belt may not remain low on the hip bones, as it should. Instead, it may settle up around the child's abdomen. In a crash, the belt would apply force on a body area that is unprotected by any bony structure. This alone could cause serious or fatal

(Continued)

Warning (Continued)

injuries. To reduce the risk of serious or fatal injuries during a crash, young children should always be secured in appropriate child restraints.

Child Restraint Systems

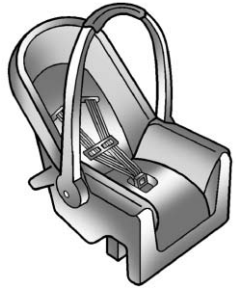

Rear-Facing Infant Restraint

A rear-facing child restraint provides restraint with the seating surface against the back of the infant.

The harness system holds the infant in place and, in a crash, acts to keep the infant positioned in the restraint.

Forward-Facing Child Restraint

A forward-facing child restraint provides restraint for the child's body with the harness.

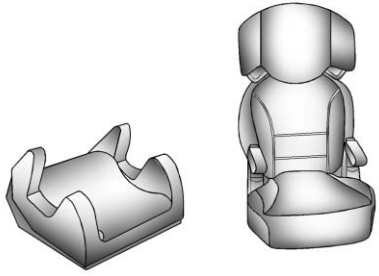

Booster Seats

A belt-positioning booster seat is used for children who have outgrown their forward-facing child restraint. Boosters are designed to improve the fit of the vehicle's seat belt system until the child is large enough for the vehicle seat belts to fit properly without a booster seat. See the seat belt fit test in *Older Children* ⇨ *88*.

Securing an Add-On Child Restraint in the Vehicle

⚠ Warning

A child can be seriously injured or killed in a crash if the child restraint is not properly secured in the vehicle. Secure the child restraint properly in the vehicle using the vehicle's seat belt or LATCH system, following the instructions that came with that child restraint and the instructions in this manual.

To help reduce the chance of injury, the child restraint must be secured in the vehicle. Child restraints must be secured in vehicle seats by lap belts or the lap belt portion of a lap-shoulder belt, or by the LATCH system. See *Lower Anchors and Tethers for Children (LATCH System)* ⇨ *95* for more information. Children can be endangered in a crash if the child restraint is not properly secured in the vehicle.

When securing an add-on child restraint, refer to the instructions that come with the restraint which may be on the restraint itself or in a booklet, or both, and to this manual. The child restraint instructions are important, so if they are not available, obtain a replacement copy from the manufacturer.

Keep in mind that an unsecured child restraint can move around in a collision or sudden stop and injure people in the vehicle. Be sure to properly secure any child restraint in the vehicle — even when no child is in it.

In some areas of the United States and Canada, Certified Child Passenger Safety Technicians (CPSTs) are available to inspect and demonstrate how to correctly use and install child restraints. In the U.S., refer to the National Highway Traffic Safety Administration (NHTSA) website to locate the nearest child safety seat inspection station. For CPST

availability in Canada, check with Transport Canada or the Provincial Ministry of Transportation office.

Securing the Child Within the Child Restraint

⚠ Warning

A child can be seriously injured or killed in a crash if the child is not properly secured in the child restraint. Secure the child properly following the instructions that came with that child restraint.

Where to Put the Restraint

According to accident statistics, children and infants are safer when properly restrained in an appropriate child restraint secured in a rear seating position.

Whenever possible, children aged 12 and under should be secured in a rear seating position.

Never put a rear-facing child restraint in the front. This is because the risk to the rear-facing child is so great if the airbag deploys.

⚠ Warning

A child in a rear-facing child restraint can be seriously injured or killed if the front passenger airbag inflates. This is because the back of the rear-facing child restraint would be very close to the inflating airbag. A child in a forward-facing child restraint can be seriously injured or killed if the front passenger airbag inflates and the passenger seat is in a forward position.

Even if the passenger sensing system has turned off the front passenger frontal airbag, no system is fail-safe. No one can guarantee that an airbag will not deploy under some unusual circumstance, even though it is turned off.

(Continued)

Warning (Continued)

Secure rear-facing child restraints in a rear seat, even if the airbag is off. If you secure a forward-facing child restraint in the front seat, always move the front passenger seat as far back as it will go. It is better to secure the child restraint in a rear seat.

See *Passenger Sensing System* ⇨ *82* for additional information.

When securing a child restraint with the seat belts in a rear seat position, study the instructions that came with the child restraint to make sure it is compatible with this vehicle.

Child restraints and booster seats vary considerably in size, and some may fit in certain seating positions better than others.

Depending on where you place the child restraint and the size of the child restraint, you may not be able to access adjacent seat belts or LATCH anchors for additional

passengers or child restraints. Adjacent seating positions should not be used if the child restraint prevents access to or interferes with the routing of the seat belt.

Wherever a child restraint is installed, be sure to follow the instructions that came with the child restraint system and secure the child restraint system properly.

Keep in mind that an unsecured child restraint can move around in a collision or sudden stop and injure people in the vehicle. Be sure to properly secure any child restraint in the vehicle — even when no child is in it.

Lower Anchors and Tethers for Children (LATCH System)

The LATCH system secures a child restraint during driving or in a crash. LATCH attachments on the child restraint are used to attach the child restraint to the anchors in the vehicle. The LATCH system is designed to make installation of a child restraint easier.

In order to use the LATCH system in your vehicle, you need a child restraint that has LATCH attachments. LATCH-compatible rear-facing and forward-facing child seats can be properly installed using either the LATCH anchors or the vehicle's seat belts. Do not use both the seat belts and the LATCH anchorage system to secure a rear-facing or forward-facing child seat.

Booster seats use the vehicle's seat belts to secure the child in the booster seat. If the manufacturer recommends that the booster seat be secured with the LATCH system, this can be done as long as the booster seat can be positioned properly and there is no interference with the proper positioning of the lap-shoulder belt on the child.

Make sure to follow the instructions that came with the child restraint, and also the instructions in this manual.

When installing a child restraint with a top tether, you must also use either the lower anchors or the seat belts to properly secure the child restraint. A child restraint must never be attached using only the top tether.

The LATCH anchorage system can be used until the combined weight of the child plus the child restraint is 29.5 kg (65 lbs). Use the seat belt alone instead of the LATCH anchorage system once the combined weight is more than 29.5 kg (65 lbs).

See *Securing Child Restraints (With the Seat Belt in the Rear Seat)* ⇨ *101* or *Securing Child Restraints (With the Seat Belt in the Front Seat)* ⇨ *103*.

Child restraints built after March 2014 will be labeled with the specific child weight up to which the LATCH system can be used to install the restraint.

The following explains how to attach a child restraint with these attachments in the vehicle.

Not all vehicle seating positions or child restraints have lower anchors and attachments or top tether anchors and attachments. In this case, the seat belt must be used (with top tether where available) to secure the child restraint.
See *Securing Child Restraints (With the Seat Belt in the Rear Seat)* ⇨ *101* or *Securing Child Restraints (With the Seat Belt in the Front Seat)* ⇨ *103*.

Lower Anchors

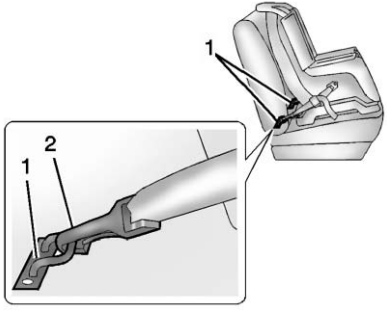

Lower anchors (1) are metal bars built into the vehicle. There are two lower anchors for each LATCH seating position that will accommodate a child restraint with lower attachments (2).

Top Tether Anchor

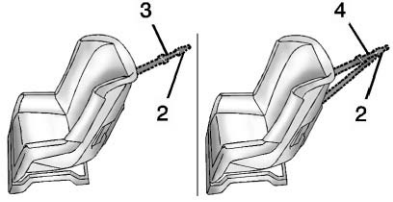

A top tether (3, 4) anchors the top of the child restraint to the vehicle.
A top tether anchor is built into the vehicle. The top tether attachment (2) on the child restraint connects to the top tether anchor in the vehicle in order to reduce the forward movement and rotation of the child restraint during driving or in a crash.

Your child restraint may have a single tether (3) or a dual tether (4). Either will have a single attachment (2) to secure the top tether to the anchor.

Some child restraints that have a top tether are designed for use with or without the top tether being attached. Others require the top tether always to be attached. In Canada, the law requires that forward-facing child restraints have a top tether, and that the tether be attached. Be sure to read and follow the instructions for your child restraint.

Lower Anchor and Top Tether Anchor Locations

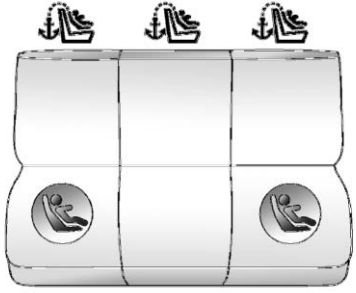

Rear Seat

: Seating positions with top tether anchors.

: Seating positions with two lower anchors.

To assist in locating the lower anchors, each second row anchor position has a label, near the crease between the seatback and the seat cushion.

To assist in locating the top tether anchors, the top tether anchor symbol is near the top tether anchors.

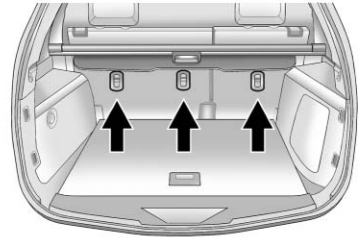

Top Tether Anchors

The top tether anchors for each rear seating position are on the back of the rear seatback. The rear compartment storage panel/cover might need to be adjusted to access the anchors. Be sure to use an anchor on the same side of the vehicle as the seating position where the child restraint will be placed.

Do not secure a child restraint in a position without a top tether anchor if a national or local law requires that the top tether be attached, or if

the instructions that come with the child restraint say that the top tether must be attached.

According to accident statistics, children and infants are safer when properly restrained in a child restraint system or infant restraint system secured in a rear seating position. See *Where to Put the Restraint* ⇨ *94* for additional information.

Securing a Child Restraint Designed for the LATCH System

⚠ Warning

If a LATCH-type child restraint is not attached to anchors, the child restraint will not be able to protect the child correctly. In a crash, the child could be seriously injured or killed. Install a LATCH-type child restraint properly using the anchors, or use the vehicle's seat belts to secure the restraint,

(Continued)

Warning (Continued)

following the instructions that came with the child restraint and the instructions in this manual.

⚠ Warning

To reduce the risk of serious or fatal injuries during a crash, do not attach more than one child restraint to a single anchor. Attaching more than one child restraint to a single anchor could cause the anchor or attachment to come loose or even break during a crash. A child or others could be injured.

⚠ Warning

Children can be seriously injured or strangled if a shoulder belt is wrapped around their neck. The

(Continued)

Warning (Continued)

shoulder belt can tighten but cannot be loosened if it is locked. The shoulder belt locks when it is pulled all the way out of the retractor. It unlocks when the shoulder belt is allowed to go all the way back into the retractor, but it cannot do this if it is wrapped around a child's neck. If the shoulder belt is locked and tightened around a child's neck, the only way to loosen the belt is to cut it.

Buckle any unused seat belts behind the child restraint so children cannot reach them. Pull the shoulder belt all the way out of the retractor to set the lock, and tighten the belt behind the child restraint after the child restraint has been installed.

Caution

Do not let the LATCH attachments rub against the vehicle's seat belts. This may damage these parts. If necessary, move buckled seat belts to avoid rubbing the LATCH attachments.

Do not fold the rear seatback when the seat is occupied. Do not fold the empty rear seat with a seat belt buckled. This could damage the seat belt or the seat. Unbuckle and return the seat belt to its stowed position, before folding the seat.

If you need to secure more than one child restraint in the rear seat, see *Where to Put the Restraint* ⇨ *94*.

This system is designed to make installation of child restraints easier. When using lower anchors, do not use the vehicle's seat belts. Instead, use the vehicle's anchors and child restraint attachments to secure the restraints. Some restraints also use another vehicle anchor to secure a top tether.

1. Attach and tighten the lower attachments to the lower anchors. If the child restraint does not have lower attachments or the desired seating position does not have lower anchors, secure the child restraint with the top tether and the seat belts. Refer to the child restraint manufacturer instructions and the instructions in this manual.
   1.1. Find the lower anchors for the desired seating position.
   1.2. Put the child restraint on the seat.
   1.3. Attach and tighten the lower attachments on the child restraint to the lower anchors.
2. If the child restraint manufacturer recommends that the top tether be attached, attach and tighten the top tether to the top tether anchor, if equipped. Refer to the child restraint instructions and the following steps:
   2.1. Find the top tether anchor.
   2.2. Route, attach and tighten the top tether according to your child restraint instructions and the following instructions:

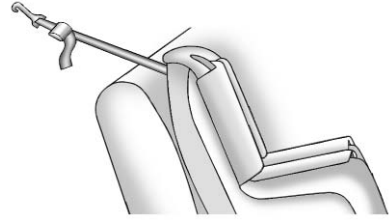

- If the position you are using does not have a headrest or head restraint and you are using a single tether, route the tether over the seatback.

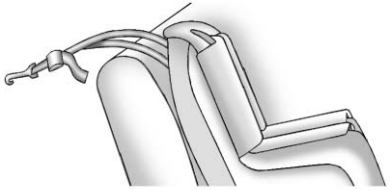

- If the position you are using does not have a headrest or head restraint and you are using a dual tether, route the tether over the seatback.

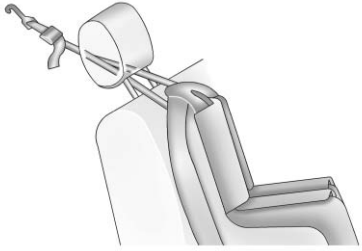

- If the position you are using has an adjustable headrest or head restraint and you are using a dual tether, raise the headrest or head restraint and route the tether under the headrest or head restraint and in between the headrest or head restraint posts.

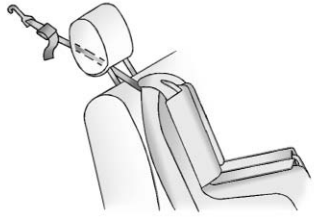

- If the position you are using has an adjustable headrest or head restraint and you are using a single tether, raise the headrest or head restraint and route the tether under the headrest or head restraint and in between the headrest or head restraint posts.

3. Before placing a child in the child restraint, make sure it is securely held in place. To check, grasp the child restraint at the LATCH path and attempt to move it side to side and back and forth. There should be no more than 2.5 cm (1 in) of movement, for proper installation.

Replacing LATCH System Parts After a Crash

⚠ Warning

A crash can damage the LATCH system in the vehicle. A damaged LATCH system may not properly secure the child restraint, resulting in serious injury or even death in a crash. To help make sure the LATCH system is working properly after a crash, see your dealer to have the system inspected and any necessary replacements made as soon as possible.

If the vehicle has the LATCH system and it was being used during a crash, new LATCH system parts may be needed.

New parts and repairs may be necessary even if the LATCH system was not being used at the time of the crash.

Securing Child Restraints (With the Seat Belt in the Rear Seat)

When securing a child restraint with the seat belts in a rear seat position, study the instructions that came with the child restraint to make sure it is compatible with this vehicle.

If the child restraint has the LATCH system, see *Lower Anchors and Tethers for Children (LATCH System)* ⇨ *95* for how and where to install the child restraint using LATCH. If a child restraint is secured in the vehicle using a seat belt and it uses a top tether, see *Lower Anchors and Tethers for Children (LATCH System)* ⇨ *95* for top tether anchor locations.

Do not secure a child seat in a position without a top tether anchor if a national or local law requires that the top tether be anchored, or if the instructions that come with the child restraint say that the top strap must be anchored.

If the child restraint or vehicle seat position does not have the LATCH system, you will be using the seat belt to secure the child restraint. Be sure to follow the instructions that came with the child restraint.

If more than one child restraint needs to be installed in the rear seat, be sure to read *Where to Put the Restraint* ⇨ *94*.

1. Put the child restraint on the seat.
2. Pick up the latch plate, and run the lap and shoulder portions of the vehicle's seat belt through or around the restraint. The child restraint instructions will show you how.

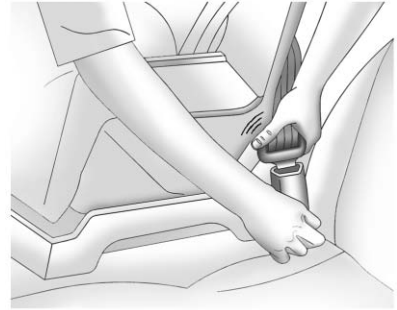

3. Push the latch plate into the buckle until it clicks.

   Position the release button on the buckle, away from the child restraint system, so that the seat belt could be quickly unbuckled if necessary.

4. Pull the shoulder belt all the way out of the retractor to set the lock. When the retractor lock is set, the belt can be tightened but not pulled out of the retractor.

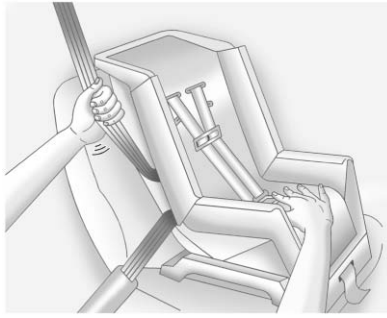

5. To tighten the belt, push down on the child restraint, pull the shoulder portion of the belt to tighten the lap portion of the belt, and feed the shoulder belt back into the retractor. When installing a forward-facing child restraint, it may be helpful to use your knee to push down on the child restraint as you tighten the belt.

   Try to pull the belt out of the retractor to make sure the retractor is locked. If the retractor is not locked, repeat Steps 4 and 5.

6. If the child restraint has a top tether, follow the child restraint manufacturer's instructions regarding the use of the top tether. See *Lower Anchors and Tethers for Children (LATCH System)* ⇨ *95*.

7. Before placing a child in the child restraint, make sure it is securely held in place. To check, grasp the child restraint at the seat belt path and attempt to move it side to side and back and forth. When the child restraint is properly installed, there should be no more than 2.5 cm (1 in) of movement.

To remove the child restraint, unbuckle the vehicle seat belt and let it return to the stowed position. If the top tether is attached to a top tether anchor, disconnect it.

Securing Child Restraints (With the Seat Belt in the Front Seat)

This vehicle has airbags. A rear seat is a safer place to secure a forward-facing child restraint. See *Where to Put the Restraint* ⇨ *94*.

In addition, the vehicle has a passenger sensing system which is designed to turn off the front outboard passenger frontal airbag under certain conditions. See *Passenger Sensing System* ⇨ *82* and *Passenger Airbag Status Indicator* ⇨ *126* for more information, including important safety information.

Never put a rear-facing child seat in the front. This is because the risk to the rear-facing child is so great, if the airbag deploys.

⚠ Warning

A child in a rear-facing child restraint can be seriously injured or killed if the front outboard passenger frontal airbag inflates. This is because the back of the rear-facing child restraint would be very close to the inflating airbag. A child in a forward-facing child restraint can be seriously injured or killed if the front outboard passenger frontal airbag inflates and the passenger seat is in a forward position.

Even if the passenger sensing system has turned off the front outboard passenger frontal airbag, no system is fail-safe. No one can guarantee that an airbag will not deploy under some unusual circumstance, even though it is turned off.

Secure rear-facing child restraints in a rear seat, even if the airbag is off. If you secure a

(Continued)

Warning (Continued)

forward-facing child restraint in the front outboard passenger seat, always move the seat as far back as it will go. It is better to secure the child restraint in a rear seat.

See *Passenger Sensing System* ⇨ *82* for additional information.

If the child restraint uses a top tether, see *Lower Anchors and Tethers for Children (LATCH System)* ⇨ *95* for top tether anchor locations.

Do not secure a child seat in a position without a top tether anchor if a national or local law requires that the top tether be anchored, or if the instructions that come with the child restraint say that the top strap must be anchored.

In Canada, the law requires that forward-facing child restraints have a top tether, and that the tether be attached.

When using the lap-shoulder belt to secure the child restraint in this position, follow the instructions that came with the child restraint and the following instructions:

1. Move the seat as far back as it will go before securing the forward-facing child restraint. Move the seat upward or the seatback to an upright position, if needed, to get a tight installation of the child restraint.

   When the passenger sensing system has turned off the front outboard passenger frontal airbag, the off indicator on the passenger airbag status indicator should light and stay lit when you start the vehicle. See *Passenger Airbag Status Indicator* ⇨ *126*.

2. Put the child restraint on the seat.

3. Pick up the latch plate, and run the lap and shoulder portions of the vehicle's seat belt through or around the restraint. The child restraint instructions will show you how.

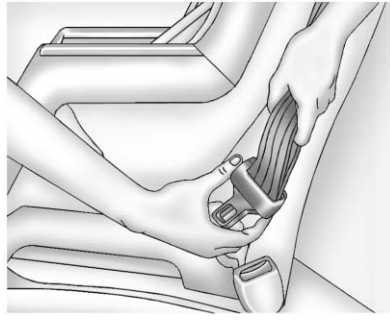

   Tilt the latch plate to adjust the belt if needed.

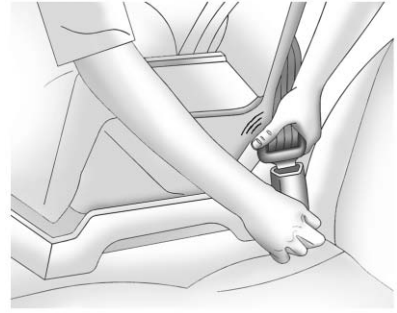

4. Push the latch plate into the buckle until it clicks.

   Position the release button on the buckle, away from the child restraint system, so that the seat belt could be quickly unbuckled if necessary.

5. Pull the shoulder belt all the way out of the retractor to set the lock. When the retractor lock is set, the belt can be tightened but not pulled out of the retractor.

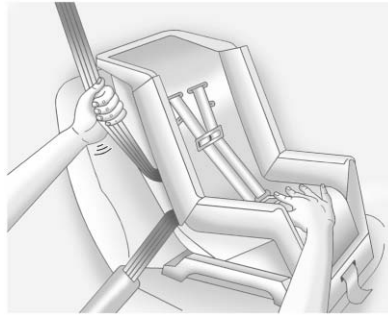

6. To tighten the belt, push down on the child restraint, pull the shoulder portion of the belt to tighten the lap portion of the belt, and feed the shoulder belt back into the retractor. When installing a forward-facing child restraint, it may be helpful to use your knee to push down on the child restraint as you tighten the belt.

   Try to pull the belt out of the retractor to make sure the retractor is locked. If the retractor is not locked, repeat Steps 5 and 6.

7. Before placing a child in the child restraint, make sure it is securely held in place. To check, grasp the child restraint at the seat belt path and attempt to move it side to side and back and forth. When the child restraint is properly installed, there should be no more than 2.5 cm (1 in) of movement.

If the airbag is off, the off indicator in the passenger airbag status indicator will come on and stay on when the vehicle is started.

If a child restraint has been installed and the on indicator is lit, see “If the On Indicator Is Lit for a Child Restraint” under *Passenger Sensing System* ⇨ *82*.

To remove the child restraint, unbuckle the vehicle seat belt and let it return to the stowed position.

Storage

Storage Compartments
Storage Compartments 106
Glove Box 106
Cupholders 106
Center Console Storage 106

Additional Storage Features
Cargo Cover 107
Cargo Tie-Downs 108
Convenience Net 108

Roof Rack System
Roof Rack System 108

Storage Compartments

⚠ Warning

Do not store heavy or sharp objects in storage compartments. In a crash, these objects may cause the cover to open and could result in injury.

Glove Box

Open the glove box by lifting up on the lever.

Cupholders

Two cupholders are in the center console. Cupholders may be located in the second row seat armrest. To access, pull the armrest down.

Center Console Storage

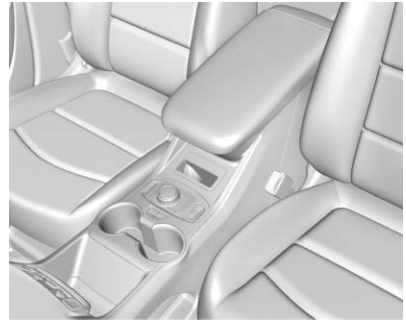

There is storage in the center console; lift the lever on the front to open.

If equipped, there are two USB ports for data and charging.

Additional Storage Features

Cargo Cover

⚠ Warning

An unsecured cargo cover could strike people in a sudden stop or turn, or in a crash. Store the cargo cover securely or remove it from the vehicle.

⚠ Warning

Do not place objects on the cargo cover. Sudden stops or turns can cause objects to be thrown in the vehicle. You or others could be injured.

If equipped, use the cargo cover to cover items in the rear of the vehicle.

To remove the cover from the vehicle, pull both ends toward each other.

To store the cargo cover:

1. Press the buttons on both ends until locked.

2. Insert the right side of the cargo cover first.

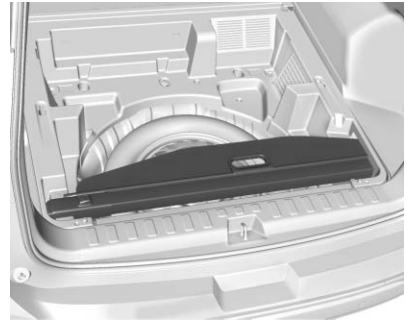

3. Store under the load floor.

To reinstall, press the buttons to unlock the ends of the cover.

Place each end of the cover in the holes behind the rear seat.

Cargo Tie-Downs

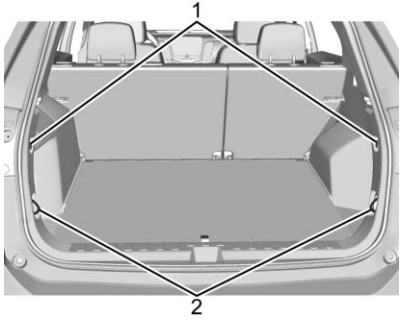

1. Convenience Net Retainers
2. Cargo Tie-Downs

The vehicle may be equipped with two cargo tie-downs and two convenience net retainers in the rear compartment.

Convenience Net

This vehicle may have a convenience net in the rear of the vehicle. Attach it to the convenience net retainers for storing small loads.

Do not use the net to store heavy loads.

Roof Rack System

⚠ Warning

If something is carried on top of the vehicle that is longer or wider than the roof rack — like paneling, plywood, or a mattress — the wind can catch it while the vehicle is being driven. The item being carried could be violently torn off, and this could cause a collision and damage the vehicle. Never carry something longer or wider than the roof rack on top of the vehicle unless using a GM certified accessory carrier.

If equipped with side rails or docking stations, GM certified crossrails can be purchased as an accessory and used to load items. See your dealer.

Caution

Loading cargo on the roof rack that weighs more than 100 kg (220 lb) or hangs over the rear or sides of the vehicle may damage the vehicle. Load cargo so that it rests evenly between the crossrails, making sure to fasten cargo securely.

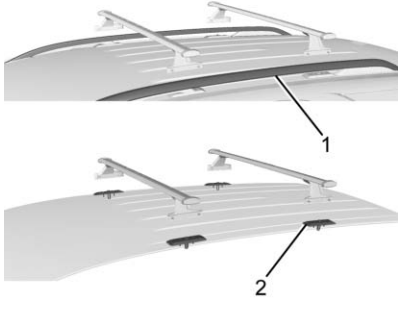

1. Side Rails
2. Docking Stations

To prevent damage or loss of cargo when driving, check to make sure crossrails and cargo are securely fastened. Loading cargo on the roof rack will make the vehicle's center of gravity higher. Avoid high speeds, sudden starts, sharp turns, sudden braking, or abrupt maneuvers; otherwise it may result in loss of control. If driving for a long distance, on rough roads, or at high speeds, occasionally stop the vehicle to make sure the cargo remains in its place. Do not exceed the maximum vehicle capacity when loading the vehicle. For more information on vehicle capacity and loading, see *Vehicle Load Limits* ⇨ *181*.

Instruments and Controls

Controls

Steering Wheel Adjustment . . . 111
Steering Wheel Controls 111
Heated Steering Wheel 111
Horn 111
Windshield Wiper/Washer 111
Rear Window Wiper/ Washer 112
Compass 113
Clock 114
Power Outlets 114
Wireless Charging 115

Warning Lights, Gauges, and Indicators

Warning Lights, Gauges, and Indicators 118
Instrument Cluster 119
Speedometer 123
Odometer 123
Trip Odometer 123
Tachometer 123
Fuel Gauge 123
Engine Coolant Temperature Gauge 124
Seat Belt Reminders 125
Airbag Readiness Light 126
Passenger Airbag Status Indicator 126
Charging System Light 127
Malfunction Indicator Lamp (Check Engine Light) 127
Brake System Warning Light 129
Electric Parking Brake Light 130
Service Electric Parking Brake Light (Uplevel Only) 130
Antilock Brake System (ABS) Warning Light 131
Tow/Haul Mode Light 131
Hill Descent Control Light 131
Lane Keep Assist (LKA) Light 131
Vehicle Ahead Indicator 132
Traction Off Light 132
StabiliTrak OFF Light 132
Traction Control System (TCS)/ StabiliTrak Light 132
Wait-to-Start Light 133
Tire Pressure Light 133
Engine Oil Pressure Light 133
Low Fuel Warning Light 134
Diesel Exhaust Fluid (DEF) Warning Light 134
Security Light 135
High-Beam On Light 135
Front Fog Lamp Light 135
Lamps On Reminder 135
Cruise Control Light 136

Information Displays

Driver Information Center (DIC) 136

Vehicle Messages

Vehicle Messages 141
Engine Power Messages 142
Vehicle Speed Messages 142

Vehicle Personalization

Vehicle Personalization 142

Universal Remote System

Universal Remote System 147
Universal Remote System Programming 147
Universal Remote System Operation 150

Controls

Steering Wheel Adjustment

To adjust the steering wheel:

1. Pull the lever down.
2. Move the steering wheel up or down.
3. Pull or push the steering wheel closer or away from you.
4. Pull the lever up to lock the steering wheel in place.

Do not adjust the steering wheel while driving.

Steering Wheel Controls

The infotainment system can be operated by using the steering wheel controls. See "Steering Wheel Controls" in the infotainment manual.

Heated Steering Wheel

: If equipped, press to turn it on or off. A light next to the button displays when the feature is turned on.

The steering wheel takes about three minutes to start heating.

Horn

Press on the steering wheel pad to sound the horn.

Windshield Wiper/Washer

The windshield wiper/washer lever is on the side of the steering column. With the ignition on or in ACC/ACCESSORY, move the windshield wiper lever to select the wiper speed.

HI : Use for fast wipes.

LO : Use for slow wipes.

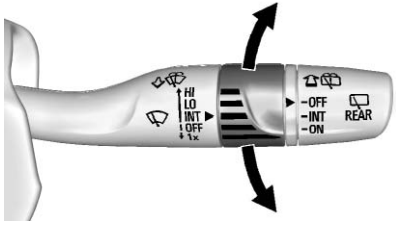

INT : Move the lever up to INT for intermittent wipes, then turn the band up for more frequent wipes or down for less frequent wipes.

OFF : Use to turn the wipers off.

1X : For a single wipe, briefly move the lever down. For several wipes, hold the lever down.

Clear snow and ice from the wiper blades and windshield before using them. If frozen to the windshield, carefully loosen or thaw them. Damaged blades should be replaced. See *Wiper Blade Replacement* ⇨ *286*.

Heavy snow or ice can overload the wiper motor. If the wiper motor overheats, the windshield wipers will stop until the motor cools and the wiper control is turned off. See *Electrical System Overload* ⇨ *292*.

Wiper Parking

If the ignition is turned off while the wipers are on LO, HI, or INT, they will immediately stop.

If the windshield wiper lever is then moved to OFF before the driver door is opened or within 10 minutes, the wipers will restart and move to the base of the windshield.

If the ignition is turned off while the wipers are performing wipes due to windshield washing, the wipers continue to run until they reach the base of the windshield.

Windshield Washer

: Pull the windshield wiper lever toward you to spray windshield washer fluid and activate the wipers. The wipers will continue until the lever is released or the maximum wash time is reached. When the lever is released, additional wipes may occur depending on how long the windshield washer had been activated. See *Washer Fluid* ⇨ *282* for information on filling the windshield washer fluid reservoir.

⚠ Warning

In freezing weather, do not use the washer until the windshield is warmed. Otherwise the washer fluid can form ice on the windshield, blocking your vision.

Rear Window Wiper/ Washer

The ignition must be on or in the ACC/ACCESSORY position to operate the rear window wiper/ washer.

Turn the end of the windshield wiper lever to operate the rear window wiper/washer.

OFF : Turns the system off.

INT : Intermittent wipes.

ON : Slow wipes.

: Push the windshield wiper lever forward to spray washer fluid on the rear window. The lever automatically returns to its original position when released.

⚠ Warning

In freezing weather, do not use the washer until the windshield is warmed. Otherwise the washer fluid can form ice on the windshield, blocking your vision.

Rear Wiper Arm Assembly Protection

When using an automatic car wash, move the rear wiper control to OFF to disable the rear wiper. In some vehicles, if the transmission is in N (Neutral) and the vehicle speed is very slow, the rear wiper will automatically park.

The wiper operations return to normal when the transmission is no longer in N (Neutral) or the vehicle speed has increased.

Reverse Gear Wipes

If the rear wiper control is off, the rear wiper will automatically operate continuously when the transmission is in R (Reverse), and the front windshield wiper is performing low or high speed wipes. If the rear wiper control is off, the transmission is in R (Reverse), and the front windshield wiper is performing interval wipes, then the rear wiper automatically performs interval wipes.

This feature can be turned on or off. See *Vehicle Personalization* ⇨ *142*.

The windshield washer reservoir is used for the windshield and rear window. Check the fluid level if either washer is not working. See *Washer Fluid* ⇨ *282*.

Compass

The vehicle may have a compass display on the Driver Information Center (DIC). The compass receives its heading and other information from the Global Positioning System (GPS) antenna, StabiliTrak, and vehicle speed information.

The compass system is designed to operate for a certain number of miles or degrees of turn before needing a signal from the GPS satellites. When the compass

display shows CAL, drive the vehicle for a short distance in an open area where it can receive a GPS signal. The compass system will automatically determine when a GPS signal is restored and provide a heading again.

Clock

Set the time and date using the infotainment system. See "Time / Date" under “Settings” in the infotainment manual.

Power Outlets

The vehicle has two 12-volt accessory power outlets, which can be used to plug in electrical equipment, such as a cell phone or MP3 player.

There are power outlets:

- On the center stack below the climate control system.
- In the rear cargo area.

To use the outlet, remove the cover.

Caution

Leaving electrical equipment plugged in for an extended period of time while the vehicle is off will drain the battery. Always unplug electrical equipment when not in use and do not plug in equipment that exceeds the maximum 20 amp rating.

⚠ Warning

Power is always supplied to the rear cargo power outlet. Do not leave electrical equipment plugged in when the vehicle is not in use because the vehicle could catch fire and cause injury or death.

Certain accessory plugs may not be compatible with the accessory power outlet and could overload vehicle and adapter fuses. If a problem is experienced, see your dealer.

When adding electrical equipment, be sure to follow the proper installation instructions included with the equipment. See *Add-On Electrical Equipment* ⇨ *257*.

Caution

Hanging heavy equipment from the power outlet can cause damage not covered by the vehicle warranty. The power outlets are designed for accessory power plugs only, such as cell phone charge cords.

Power Outlet 110/120 Volt Alternating Current

If equipped, this power outlet can be used to plug in electrical equipment that uses a maximum limit of 150 watts.

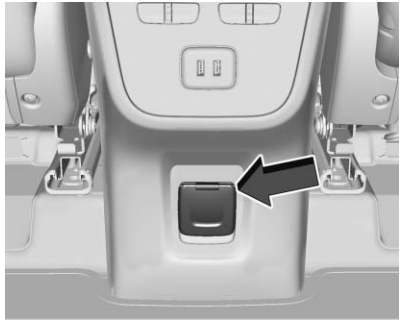

The power outlet is on the rear of the center console.

An indicator light on the outlet turns on to show it is in use. The light comes on when the ignition is on and equipment requiring less than 150 watts is plugged into the outlet, and no system fault is detected.

The indicator light does not come on when the ignition is off or if the equipment is not fully seated into the outlet.

If equipment is connected using more than 150 watts or a system fault is detected, a protection circuit shuts off the power supply and the indicator light turns off. To reset the circuit, unplug the item and plug it back in or turn the Retained Accessory Power (RAP) off and then back on. See *Retained Accessory Power (RAP)* ⇨ *192*. The power restarts when equipment using 150 watts or less is plugged into the outlet and a system fault is not detected.

The power outlet is not designed for the following and may not work properly if they are plugged in:

- Equipment with high initial peak wattage, such as compressor-driven refrigerators and electric power tools
- Other equipment requiring an extremely stable power supply, such as microcomputer-controlled electric blankets and touch sensor lamps
- Medical equipment

Wireless Charging

If equipped, the vehicle has a wireless charging pocket outside the armrest of the center console. The system operates at 145 kHz and wirelessly charges one PMA or Qi compatible mobile device. The power output of the system is capable of charging at a rate up to 3 amp (15W), as requested by the compatible mobile device. See *Radio Frequency Statement* ⇨ *379*.

To check for phone or other device compatibility:

- In the U.S., see my.gmc.com/learn.
- In Canada, see gmtotalconnect.ca.
- Or, see your dealer for details.

⚠ Warning

Wireless charging can affect the operation of an implanted pacemaker or other medical devices. If you have one, it is

(Continued)

Warning (Continued)

recommended to consult with your doctor before using the wireless charging system.

The vehicle must be on, in ACC/ACCESSORY, or in Retained Accessory Power (RAP). The wireless charging feature may not correctly indicate charging when the vehicle is in RAP. See *Retained Accessory Power (RAP)* ⇨ *192*.

The operating temperature is −20 °C (−4 °F) to 60 °C (140 °F) for the charging system and 0 °C (32 °F) to 35 °C (95 °F) for the phone.

⚠ Warning

Remove all objects from the charging pad before charging your mobile device. Objects, such as coins, keys, rings, paper clips, or cards, between the phone and charging pad will become very

(Continued)

Warning (Continued)

hot. On the rare occasion that the charging system does not detect an object, and the object gets wedged between the phone and charger, remove the phone and allow the object to cool before removing it from the charging pad, to prevent burns.

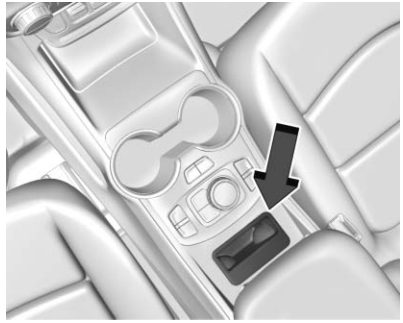

To charge a mobile phone:

1. Remove all objects from the charging pocket. The system may not charge if there are any objects between the phone and charging pocket.
2. With the mobile phone screen facing the rear of the vehicle, slowly insert the phone into the charging pocket until ϟ displays on the ☎ on the infotainment display. This indicates that the mobile device is properly positioned and charging.

If ϟ does not appear on the infotainment display:

1. Remove the phone from the pocket and wait three seconds.
2. Turn the mobile phone 180 degrees and insert it back into the pocket with the screen facing the rear of the vehicle.

Software Acknowledgements

Certain Wireless Charging Module product from LG Electronics, Inc. ("LGE") contains the open source

software detailed below. Refer to the indicated open source licenses (as are included following this notice) for the terms and conditions of their use.

OSS Notice Information

To obtain the source code that is contained in this product, please visit http://opensource.lge.com. In addition to the source code, all referred license terms, warranty disclaimers and copyright notices are available for download. LG Electronics will also provide open source code to you on CD-ROM for a charge covering the cost of performing such distribution (such as the cost of media, shipping, and handling) upon email request to opensource@lge.com. This offer is valid for three (3) years from the date on which you purchased the product.

Freescale-WCT library

Copyright (c) 2012-2014 Freescale Semiconductor, Inc.. All rights reserved.

Redistribution and use in source and binary forms, with or without modification, are permitted provided that the following conditions are met:

1. Redistributions of source code must retain the above copyright notice, this list of conditions and the following disclaimer.
2. Redistributions in binary form must reproduce the above copyright notice, this list of conditions and the following disclaimer in the documentation and/or other materials provided with the distribution.
3. Neither the name of the copyright holder nor the names of its contributors may be used to endorse or promote products derived from this software without specific prior written permission.

THIS SOFTWARE IS PROVIDED BY THE COPYRIGHT HOLDERS AND CONTRIBUTORS "AS IS" AND ANY EXPRESS OR IMPLIED WARRANTIES, INCLUDING, BUT NOT LIMITED TO, THE IMPLIED WARRANTIES OF MERCHANTABILITY AND FITNESS FOR A PARTICULAR PURPOSE ARE DISCLAIMED. IN NO EVENT SHALL THE COPYRIGHT HOLDER OR CONTRIBUTORS BE LIABLE FOR ANY DIRECT, INDIRECT, INCIDENTAL, SPECIAL, EXEMPLARY, OR CONSEQUENTIAL DAMAGES (INCLUDING, BUT NOT LIMITED TO, PROCUREMENT OF SUBSTITUTE GOODS OR SERVICES; LOSS OF USE, DATA, OR PROFITS; OR BUSINESS INTERRUPTION) HOWEVER CAUSED AND ON ANY THEORY OF LIABILITY, WHETHER IN CONTRACT, STRICT LIABILITY, OR TORT (INCLUDING NEGLIGENCE OR OTHERWISE) ARISING IN ANY WAY OUT OF THE USE OF THIS SOFTWARE, EVEN IF ADVISED OF THE POSSIBILITY OF SUCH DAMAGE.

Warning Lights, Gauges, and Indicators

Warning lights and gauges can signal that something is wrong before it becomes serious enough to cause an expensive repair or replacement. Paying attention to the warning lights and gauges could prevent injury.

Some warning lights come on briefly when the engine is started to indicate they are working. When one of the warning lights comes on and stays on while driving, or when one of the gauges shows there may be a problem, check the section that explains what to do. Waiting to do repairs can be costly and even dangerous.

Instrument Cluster

Base Level English Shown, Metric Similar

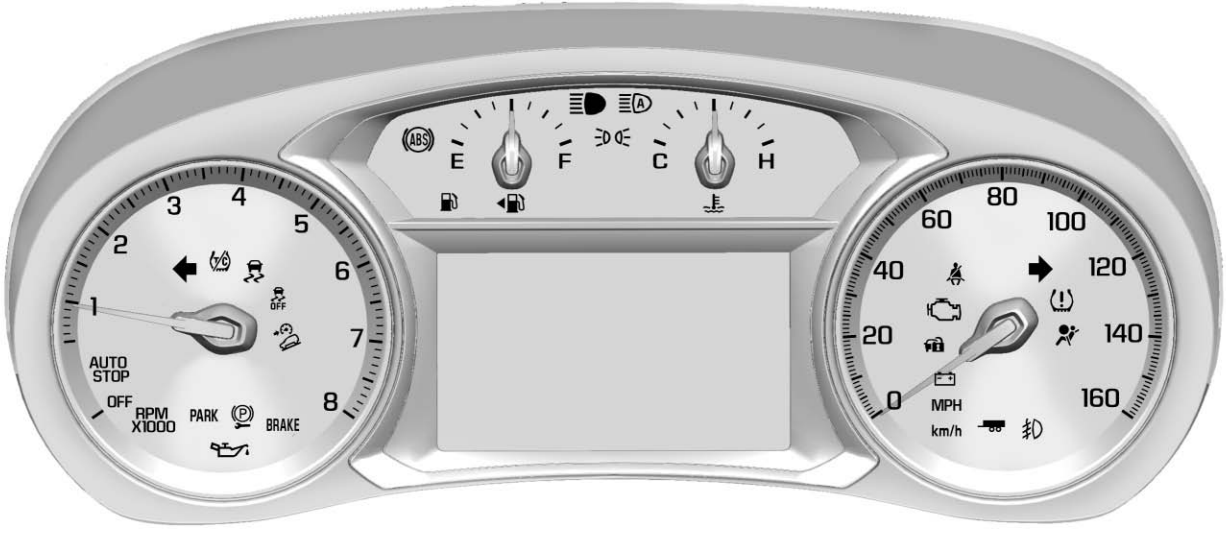

Uplevel English Shown, Metric Similar

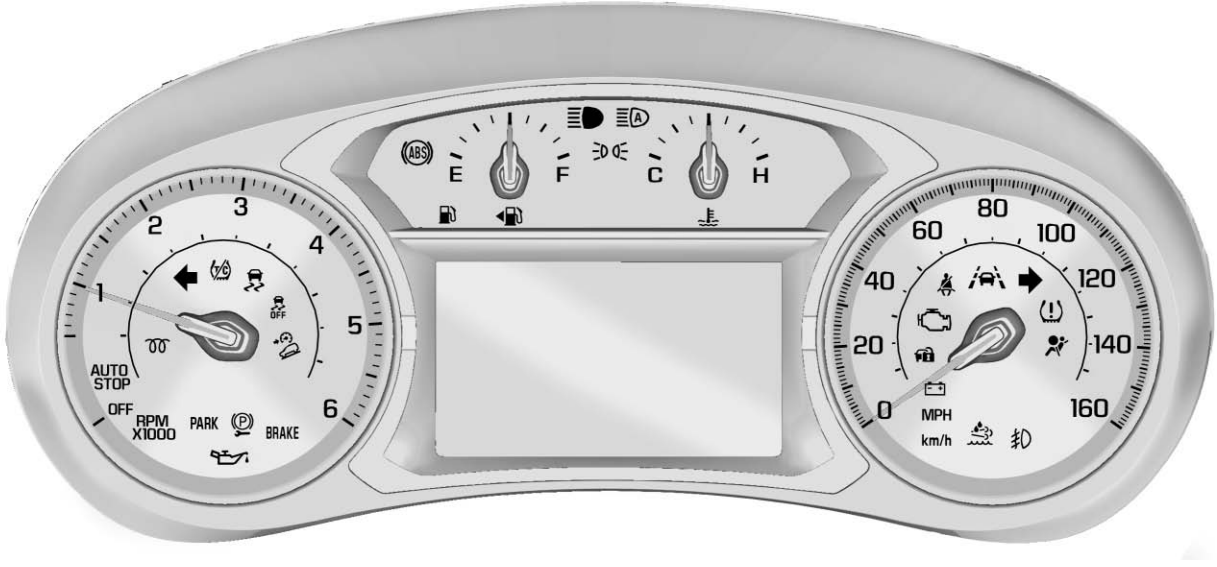

Diesel Uplevel English Shown, Base Level Similar

Cluster Menu (Uplevel)

There is an interactive display area in the center of the instrument cluster.

Use the right steering wheel control to open and scroll through the different items and displays.

Press ◁ to access the cluster applications. Use △ or ▽ to scroll through the list of available applications. Not all applications will be available on all vehicles.

- Info App. This is where the selected Driver Information Center (DIC) displays can be viewed. See *Driver Information Center (DIC)* ⇨ *136*.
- Navigation
- Options

Navigation

Press ✓ to select the Navigation app, then press ▷ to enter the Navigation menu. If there is no active route, resume the last route, start a route from Favorites or Recent Destinations, or navigate to Home or Work. If there is an active route, select an item on the list to cancel route guidance; mute or unmute voice guidance; add destinations from Favorites, Recent Destinations, Home, or Work.

Options

Press ✓ to select the Options app, then press ▷ to enter the Options menu. Use △ or ▽ to scroll through items in the Options menu.

Units : Press ▷ while Units is displayed to enter the Units menu. Choose English or Metric units by pressing ✓ while the desired item is highlighted. A checkmark will be displayed next to the selected item.

Info Pages : Press ▷ while Info Pages is displayed to enter the Info Pages menu and select the items to be displayed in the Info app. See *Driver Information Center (DIC)* ⇨ *136*.

Traction and Stability : Press ▷ to enter the Traction and Stability menu. To turn the Traction Control System (TCS) on or off, choose Traction. To turn StabiliTrak on or off, choose Stability. See *Traction Control/Electronic Stability Control* ⇨ *213*.

Speed Warning : The Speed Warning display allows the driver to set a speed that they do not want to exceed. To set the Speed Warning press ▷ when Speed Warning is displayed. Press △ or ▽ to adjust the value. Press ✓ to set the speed.

Once the speed is set, this feature can be turned off by pressing ✓ while viewing this page. If the selected speed limit is exceeded, a pop-up warning is displayed with a chime.

Software Information : Displays open source software information.

Speedometer

The speedometer shows the vehicle's speed in either kilometers per hour (km/h) or miles per hour (mph).

Odometer

The odometer shows how far the vehicle has been driven, in either kilometers or miles.

Trip Odometer

The trip odometer shows how far the vehicle has been driven since the trip odometer was last reset.

The trip odometer is accessed and reset through the Driver Information Center (DIC). See *Driver Information Center (DIC)* ⇨ *136*.

Tachometer

The tachometer displays the engine speed in revolutions per minute (rpm).

For vehicles with the Stop/Start system, when the ignition is on, the tachometer indicates the vehicle status. When pointing to AUTO STOP, the engine is off but the vehicle is on and can move. The engine could auto start at any time. When the indicator points to OFF, the vehicle is off.

When the engine is on, the tachometer will indicate the engine's revolutions per minute (rpm). The tachometer may vary by several hundred rpm's, during Auto Stop mode, when the engine is shutting off and restarting.

A slight bump may be felt when the transmission is determining the most fuel efficient operating range.

Fuel Gauge

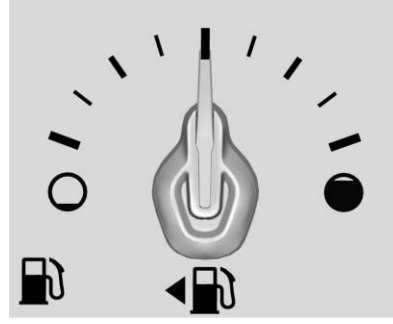

Metric Uplevel

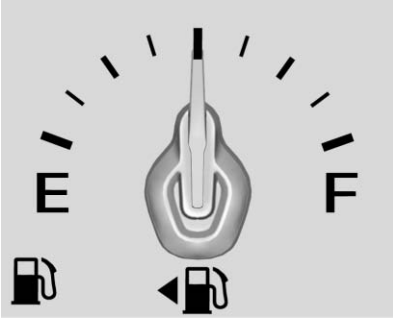

English Uplevel

When the ignition is on, the fuel gauge indicates about how much fuel is left in the tank.

An arrow on the fuel gauge indicates the side of the vehicle the fuel door is on.

When the indicator nears empty, the low fuel light comes on. There is a small amount of fuel left, but the fuel tank should be filled soon.

Here are four things that some owners ask about. None of these show a problem with the fuel gauge:

- At the service station, the fuel pump shuts off before the gauge reads full.
- It takes a little more or less fuel to fill up than the gauge indicated. For example, the gauge indicated the tank was half full, but it actually took a little more or less than half the tank's capacity to fill the tank.
- The gauge moves a little while turning a corner or speeding up.
- The gauge takes a few seconds to stabilize after the ignition is turned on, and goes back to empty when the ignition is turned off.

Engine Coolant Temperature Gauge

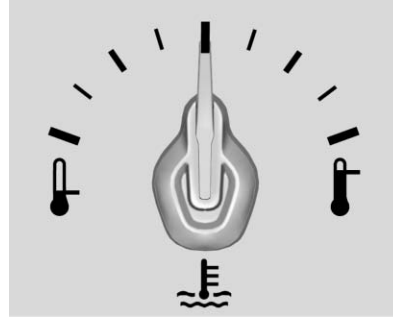

Metric Uplevel

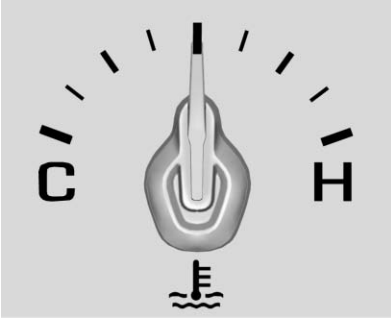

English Uplevel

This gauge shows the engine coolant temperature.

If the pointer moves toward the warning area at the high end of the gauge, the engine is too hot.

If the engine coolant has overheated and the vehicle has been operating under normal driving conditions, pull off the road, stop the vehicle, and turn off the engine as soon as possible. See *Engine Overheating* ⇨ *280*.

Seat Belt Reminders

Driver Seat Belt Reminder Light

There is a driver seat belt reminder light on the instrument cluster.

When the vehicle is started, this light flashes and a chime may come on to remind the driver to fasten their seat belt. Then the light stays on solid until the belt is buckled. This cycle may continue several times if the driver remains or becomes unbuckled while the vehicle is moving.

If the driver seat belt is buckled, neither the light nor the chime comes on.

Passenger Seat Belt Reminder Light

There is a passenger seat belt reminder light near the passenger airbag status indicator. See *Passenger Sensing System* ⇨ *82*.

When the vehicle is started, this light flashes and a chime may come on to remind passengers to fasten their seat belt. Then the light stays on solid until the belt is buckled. This cycle continues several times if the passenger remains or becomes unbuckled while the vehicle is moving.

If the passenger seat belt is buckled, neither the chime nor the light comes on.

The front passenger seat belt reminder light and chime may turn on if an object is put on the seat

such as a briefcase, handbag, grocery bag, laptop, or other electronic device. To turn off the reminder light and/or chime, remove the object from the seat or buckle the seat belt.

Airbag Readiness Light

This light shows if there is an electrical problem with the airbag system. The system check includes the airbag sensor(s), the passenger sensing system, the pretensioners, the airbag modules, the wiring, and the crash sensing and diagnostic module. For more information on the airbag system, see *Airbag System* ⇨ *76*.

The airbag readiness light comes on for several seconds when the vehicle is started. If the light does not come on then, have it fixed immediately.

⚠ Warning

If the airbag readiness light stays on after the vehicle is started or comes on while driving, it means the airbag system might not be working properly. The airbags in the vehicle might not inflate in a crash, or they could even inflate without a crash. To help avoid injury, have the vehicle serviced right away.

If there is a problem with the airbag system, a Driver Information Center (DIC) message may also come on.

Passenger Airbag Status Indicator

The vehicle has a passenger sensing system. See *Passenger Sensing System* ⇨ *82* for important safety information. The overhead console has a passenger airbag status indicator.

When the vehicle is started, the passenger airbag status indicator will light ON and OFF for several seconds as a system check. Then, after several more seconds, the status indicator will light either ON or OFF to let you know the status of the front outboard passenger frontal airbag.

If the word ON is lit on the passenger airbag status indicator, it means that the front outboard passenger frontal airbag is allowed to inflate.

If the word OFF is lit on the passenger airbag status indicator, it means that the passenger sensing system has turned off the front outboard passenger frontal airbag.

If, after several seconds, both status indicator lights remain on, or if there are no lights at all, there may be a problem with the lights or the passenger sensing system. See your dealer for service.

⚠ Warning

If the airbag readiness light ever comes on and stays on, it means that something may be wrong with the airbag system. To help avoid injury to yourself or others, have the vehicle serviced right away. See *Airbag Readiness Light* ⇨ *126* for more information, including important safety information.

Charging System Light

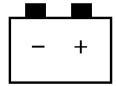

The charging system light comes on briefly when the ignition is turned on, but the engine is not running, as a check to show the light is working. The light turns off when the engine is started. If it does not, have the vehicle serviced by your dealer.

If the light stays on, or comes on while driving, there may be a problem with the electrical charging system. Have it checked by your dealer. Driving while this light is on could drain the battery.

When this light comes on, the Driver Information Center (DIC) also displays a message.

If a short distance must be driven with the light on, be sure to turn off all accessories, such as the radio and air conditioner.

Malfunction Indicator Lamp (Check Engine Light)

This light is part of the vehicle's emission control on-board diagnostic system. If this light is on while the engine is running, a malfunction has been detected and the vehicle may require service. The light should come on to show that it is working when the ignition is in Service Mode. See *Ignition Positions* ⇨ *186*.

This light may also come on when the system has detected a problem with the Diesel Exhaust Fluid (DEF) management system. See *Diesel Exhaust Fluid* ⇨ *198*.

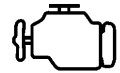

Malfunctions are often indicated by the system before any problem is noticeable. Being aware of the light and seeking service promptly when it comes on may prevent damage.

Caution

If the vehicle is driven continually with this light on, the emission control system may not work as well, the fuel economy may be lower, and the vehicle may not run smoothly. This could lead to costly repairs that might not be covered by the vehicle warranty.

Caution

Modifications to the engine, transmission, exhaust, intake, or fuel system, or the use of replacement tires that do not meet the original tire specifications, can cause this light to come on. This could lead to

(Continued)

Caution (Continued)

costly repairs not covered by the vehicle warranty. This could also affect the vehicle's ability to pass an Emissions Inspection/ Maintenance test. See *Accessories and Modifications* ⇨ *261*.

Light Flashing (Gasoline Engine Only)

If the light is flashing : A malfunction has been detected that could damage the emission control system and increase vehicle emissions. Diagnosis and service may be required.

To help prevent damage, reduce vehicle speed and avoid hard accelerations and uphill grades. If towing a trailer, reduce the amount of cargo being hauled as soon as possible.

If the light continues to flash, find a safe place to park. Turn the vehicle off and wait at least 10 seconds before restarting the engine. If the light is still flashing, follow the previous guidelines and see your dealer for service as soon as possible.

Light on Steady (All Engines)

If the light is on steady : A malfunction has been detected. Diagnosis and service may be required.

Check the following:

- If fuel has been added to the vehicle using the capless funnel adapter, make sure that it has been removed. See "Filling the Tank with a Portable Gas Can" under *Filling the Tank (Gasoline)* ⇨ *247* or *Filling the Tank (Diesel)* ⇨ *248*. The diagnostic system can detect if the adapter has been left installed in the vehicle, allowing fuel to evaporate into the atmosphere. A few driving trips with the adapter removed may turn off the light.
- Poor fuel quality can cause inefficient engine operation and poor driveability, which may go

away once the engine is warmed up. If this occurs, change the fuel brand. It may require at least one full tank of the proper fuel to turn the light off.
See *Fuel (Gasoline)* ⇨ *236* or *Fuel for Diesel Engines* ⇨ *238*.

If the light remains on, see your dealer.

Emissions Inspection and Maintenance Programs

If the vehicle requires an Emissions Inspection/Maintenance test, the test equipment will likely connect to the vehicle's Data Link Connector (DLC).

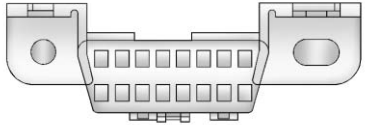

The DLC is under the instrument panel to the left of the steering wheel. Connecting devices that are not used to perform an Emissions Inspection/Maintenance test or to service the vehicle may affect vehicle operation. See *Add-On Electrical Equipment* ⇨ *257*. See your dealer if assistance is needed.

The vehicle may not pass inspection if:

- The light is on when the engine is running.
- The light does not come on when the ignition is in Service Mode.
- Critical emission control systems have not been completely diagnosed. If this happens, the vehicle would not be ready for inspection and might require several days of routine driving before the system is ready for inspection. This can happen if the 12-volt battery has recently been replaced or run down, or if the vehicle has been recently serviced.

See your dealer if the vehicle will not pass or cannot be made ready for the test.

Brake System Warning Light

The vehicle brake system consists of two hydraulic circuits. If one circuit is not working, the remaining circuit can still work to stop the vehicle. For normal braking performance, both circuits need to be working

Metric

English

This light should come on briefly when the engine is started. If it does not come on then, have it fixed so it will be ready to warn you if there is a problem.

When the ignition is on, the brake system warning light comes on when the parking brake is set. The light stays on if the parking brake does not fully release. If it stays on after the parking brake is fully

released, there is a brake problem. Have the brake system inspected immediately.

⚠ Warning

The brake system might not be working properly if the brake system warning light is on. Driving with the brake system warning light on can lead to a crash. If the light is still on after the vehicle has been pulled off the road and carefully stopped, have the vehicle towed for service.

If the light comes on while driving, a chime sounds. Pull off the road and stop. The pedal might be harder to push or go closer to the floor. It might also take longer to stop. If the light is still on, have the vehicle towed for service. See *Towing the Vehicle* ⇨ *337*.

Electric Parking Brake Light

PARK

Metric **English**

This light comes on when the parking brake is applied. If the light continues flashing after the parking brake is released, or while driving, there is a problem with the Electric Parking Brake system. A message may also display in the Driver Information Center (DIC).

If the light does not come on, or remains flashing, see your dealer.

Service Electric Parking Brake Light (Uplevel Only)

This light should come on briefly when starting the vehicle. If it does not come on, have it fixed so it will be ready to warn if there is a problem.

If this light stays on, take the vehicle to your dealer as soon as possible. See the information for the Electric Parking Brake under *Electric Parking Brake* ⇨ *210*. A message may also display in the Driver Information Center (DIC).

Antilock Brake System (ABS) Warning Light

For vehicles with the Antilock Brake System (ABS), this light comes on briefly when the engine is started.

If the light does not come on, have it fixed so it will be ready to warn if there is a problem.

If the ABS light comes on and stays on while driving, stop as soon as possible and turn the ignition off. Start the engine again to reset the system. If the light stays on after driving at a speed above 20 km/h (13 mph), see your dealer for service. A chime may also sound when the light comes on steady.

If the regular brake system warning light is not on, the vehicle still has brakes, but not antilock brakes. If the regular brake system warning light is also on, the vehicle does not have antilock brakes and there is a problem with the regular brakes. See *Brake System Warning Light* ⇨ *129*.

Tow/Haul Mode Light

For vehicles with the Tow/Haul Mode feature, this light comes on when the Tow/Haul Mode has been activated.

See *Tow/Haul Mode* ⇨ *209*.

Hill Descent Control Light

If equipped, the Hill Descent Control light comes on when the system is ready for use. When the light flashes, the system is active.

See *Hill Descent Control (HDC)* ⇨ *216*.

Lane Keep Assist (LKA) Light

If equipped, this light is green if LKA is available to assist.

LKA may assist by gently turning the steering wheel if the vehicle approaches a detected lane marking without using the turn signal in that direction. The LKA light will turn amber.

This light is amber and flashes as a Lane Departure Warning (LDW) alert, to indicate that the lane marking has been crossed.

See *Lane Keep Assist (LKA)* ⇨ *234*.

Vehicle Ahead Indicator

If equipped, this indicator will display green when a vehicle is detected ahead.

See *Forward Collision Alert (FCA) System* ⇨ *228*.

Traction Off Light

This light comes on briefly while starting the engine. If it does not, have the vehicle serviced by your dealer. If the system is working normally, the indicator light then turns off.

The traction off light comes on when the Traction Control System (TCS) has been turned off through the Driver Information Center (DIC).

This light and the StabiliTrak OFF light come on when StabiliTrak is turned off.

If the TCS is off, wheel speed will be limited when necessary to protect the driveline from damage. Adjust driving accordingly.

See *Traction Control/Electronic Stability Control* ⇨ *213*.

StabiliTrak OFF Light

This light comes on briefly while starting the vehicle. If it does not, have the vehicle serviced by your dealer.

This light comes on when the StabiliTrak system is turned off. If StabiliTrak is off, the Traction Control System (TCS) is also off.

If the StabiliTrak and TCS are off, the system does not assist in controlling the vehicle. Turn on the TCS and the StabiliTrak systems and the warning light turns off.

See *Traction Control/Electronic Stability Control* ⇨ *213*.

Traction Control System (TCS)/StabiliTrak Light

This light comes on briefly when the engine is started.

If the light does not come on, have the vehicle serviced by your dealer. If the system is working normally, the indicator light turns off.

If the light is on and not flashing, the TCS and potentially the StabiliTrak system have been disabled.
A Driver Information Center (DIC) message may display. Check the DIC messages to determine which feature(s) is no longer functioning and whether the vehicle requires service.

If the light is on and flashing, the TCS and/or the StabiliTrak system is actively working.

See *Traction Control/Electronic Stability Control* ⇨ *213*.

Wait-to-Start Light

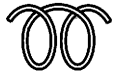

For diesel engines, the wait-to-start light shows that the engine is functioning properly and indicates when the engine can be started.

The fast warm-up glow plug system makes the wait-to-start light stay on for a shorter amount of time than most diesel engines.

For more information, see *Starting the Engine* ⇨ *188*.

Tire Pressure Light

For vehicles with the Tire Pressure Monitor System (TPMS), this light comes on briefly when the engine is started. It provides information about tire pressures and the TPMS.

When the Light Is On Steady

This indicates that one or more of the tires are significantly underinflated.

A Driver Information Center (DIC) tire pressure message may also display. Stop as soon as possible, and inflate the tires to the pressure value shown on the Tire and Loading Information label. See *Tire Pressure* ⇨ *307*.

When the Light Flashes First and Then Is On Steady

If the light flashes for about a minute and then stays on, there may be a problem with the TPMS. If the problem is not corrected, the light will come on at every ignition cycle. See *Tire Pressure Monitor Operation* ⇨ *310*.

Engine Oil Pressure Light

Caution

Lack of proper engine oil maintenance can damage the engine. Driving with the engine oil low can also damage the engine. The repairs would not be covered by the vehicle warranty. Check

(Continued)

Caution (Continued)

the oil level as soon as possible. Add oil if required, but if the oil level is within the operating range and the oil pressure is still low, have the vehicle serviced. Always follow the maintenance schedule for changing engine oil.

This light should come on briefly as the engine is started. If it does not come on, have the vehicle serviced by your dealer.

If the light comes on and stays on, it means that oil is not flowing through the engine properly. The vehicle could be low on oil and might have some other system problem. See your dealer.

Low Fuel Warning Light

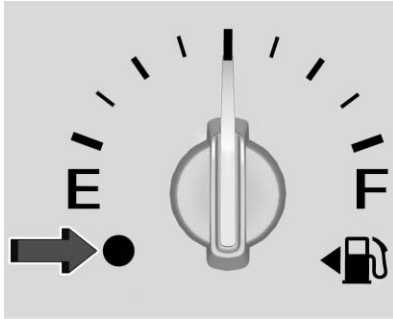

For the base level cluster, this light comes on when the fuel tank is low on fuel. The light turns off when fuel is added. If it does not, have the vehicle serviced.

For the uplevel cluster, this light is near the fuel gauge and comes on briefly when the ignition is turned on as a check to show it is working.

It also comes on when the fuel tank is low on fuel. The light turns off when fuel is added. If it does not, have the vehicle serviced.

Diesel Exhaust Fluid (DEF) Warning Light

This light, a Driver Information Center (DIC) Message, and a chime come on when there is an issue with the DEF.

If the DEF issue has not been corrected, the light will continue to flash. The vehicle's speed may also be limited. See *Diesel Exhaust Fluid* ⇨ *198*.

Security Light

The security light should come on briefly as the engine is started. If it does not come on, have the vehicle serviced by your dealer. If the system is working normally, the indicator light turns off.

If the light stays on and the engine does not start, there could be a problem with the theft-deterrent system. See *Immobilizer Operation* ⇨ *48*.

High-Beam On Light

This light comes on when the high-beam headlamps are in use. See *Headlamp High/Low-Beam Changer* ⇨ *153*.

IntelliBeam Light

This light comes on when the IntelliBeam system, if equipped, is enabled. See *Exterior Lamp Controls* ⇨ *151*.

Front Fog Lamp Light

If equipped, the fog lamp light comes on when the fog lamps are in use.

The light goes out when the fog lamps are turned off. See *Fog Lamps* ⇨ *155* for more information.

Lamps On Reminder

For vehicles with the lamps on reminder light, it comes on when the lights are in use.

Cruise Control Light

For vehicles with cruise control, the cruise control light is white when the cruise control is on and ready, and turns green when the cruise control is set and active.

The light turns off when the cruise control is turned off. See *Cruise Control* ⇨ *220*.

Information Displays

Driver Information Center (DIC)

The DIC displays are shown in the center of the instrument cluster in the Info app. See *Instrument Cluster* ⇨ *119*. The displays show the status of many vehicle systems. The controls for the DIC are on the right steering wheel control.

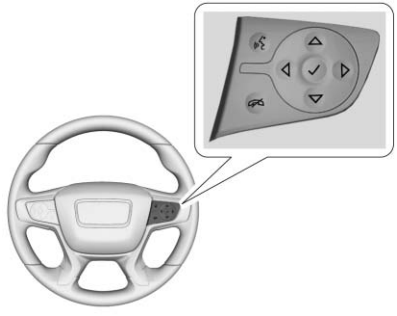

△ **or** ▽ **:** Press to move up or down in a list.

◁ **or** ▷ **:** Press to move between the interactive display zones in the cluster.

✓ **:** Press to open a menu or select a menu item. Press and hold to reset values on certain screens.

Base Level DIC

Use ◁ or ▷ to choose the Trip, Vehicle, or Eco menus. Use △ or ▽ to scroll through items in each menu.

Trip/Fuel Menu (TRIP) Items

Speed : Displays how fast the vehicle is moving in either kilometers per hour (km/h) or miles per hour (mph). The speedometer cannot be reset. If equipped, press ✓ to open the menu and select to display the speed limit signs.

Trip 1 or Trip 2, Average Fuel Economy : Displays the current distance traveled, in either kilometers (km) or miles (mi), from the last reset for the trip odometer. The trip odometer can be reset to

zero by pressing and holding ✓ while the trip odometer display is showing.

Also displays the approximate average liters per 100 kilometers (L/100 km) or miles per gallon (mpg). This number is based on the number of L/100 km (mpg) recorded since the last time this menu item was reset. This number reflects only the approximate average fuel economy that the vehicle has right now, and will change as driving conditions change. Reset the average consumption by pressing ✓ when it is displayed.

Fuel Range : Displays the approximate distance the vehicle can be driven without refueling. The fuel range estimate is based on an average of the vehicle's fuel economy over recent driving history and the amount of fuel remaining in the fuel tank. Fuel range cannot be reset.

Average Vehicle Speed : Displays the average vehicle speed of the vehicle in kilometers per hour (km/h) or miles per hour (mph). This average is based on the various vehicle speeds recorded since the last reset. Reset the average speed by pressing ✓ when it is displayed.

Timer : To start the timer, press ✓ while Timer is displayed. The display will show the amount of time that has passed since the timer was last reset, not including time the ignition is off. Time will continue to be counted as long as the ignition is on, even if another display is being shown on the DIC. The timer will record up to 99 hours, 59 minutes, and 59 seconds (99:59:59) after which the display will return to zero. To stop the timer, press ✓ briefly while Timer is displayed. To reset the timer to zero, press and hold ✓.

Navigation : Used for the OnStar Turn-by-Turn guidance.

Blank Display : Displays no information.

Vehicle Information Menu (VEHICLE) Items

Units : Choose between Metric or US when Units is active. Press ✓ to confirm the setting. This will change the displays on the DIC to the type of measurements you select.

Speed Warning : This display is used to set the vehicle speed at which the speed warning chime sounds and the alert is displayed. The speed can be set by pressing ✓ while the speed warning display is showing.

Remaining Oil Life : Displays an estimate of the oil's remaining useful life. If REMAINING OIL LIFE 99% is displayed, that means 99% of the current oil life remains.

When the remaining oil life is low, the CHANGE ENGINE OIL SOON message will appear on the display. The oil should be changed as soon as possible. See *Engine Oil* ⇨ *269*. In addition to the engine oil life system monitoring the oil life,

additional maintenance is recommended. See *Maintenance Schedule* ⇨ *353*.

The Oil Life display must be reset after each oil change. Do not reset the Oil Life display accidentally at any time other than when the oil has just been changed. It cannot be reset accurately until the next oil change. To reset the engine oil life system, see *Engine Oil Life System* ⇨ *273*.

Oil Pressure : Oil pressure is displayed in either kilopascal (kPa) or in pounds per square inch (psi).

Fuel Filter Life : This display shows an estimate of the fuel filter's remaining useful life. If 90% Fuel Filter Life Remaining is displayed, it means 90% of the current fuel filter life remains. The fuel filter life system will alert when to change the fuel filter on a schedule consistent with your driving conditions. When the remaining fuel filter life is low, the CHANGE FUEL FILTER message will appear on the display. Change the fuel filter as soon as possible.

Diesel Exhaust Fluid (DEF) Level (Diesel Engine Only) : The DEF level will be displayed as either OK, XX%, or LOW. When LOW appears on the display, add DEF as soon as possible. See *Diesel Exhaust Fluid* ⇨ *198*.

Tire Pressure : Displays a vehicle with the approximate pressures of all four tires. Tire pressure is displayed in either kilopascal (kPa) or in pounds per square inch (psi). See *Tire Pressure Monitor System* ⇨ *309* and *Tire Pressure Monitor Operation* ⇨ *310*.

Battery Voltage : Displays the current battery voltage, if equipped. Battery voltage changes are normal while driving. See *Charging System Light* ⇨ *127*. If there is a problem with the battery charging system, the DIC will display a message.

Coolant Temperature : Displays the coolant temperature in degrees Celsius (°C) or degrees Fahrenheit (°F).

TC/Stabilitrak : If equipped, press ✓ to turn on or off Traction Control or StabiliTrak.

ECO Drive Assist Menu (ECO) Items

Fuel Economy : The center displays the approximate instantaneous fuel economy as a number and bar graph. Displayed above the bar graph is a running average of fuel economy for the most recently traveled selected distance. Displayed below the bar graph is the best average fuel economy that has been achieved for the selected distance. The selected distance is displayed at the top of the page as “last xxx mi/km.” Press ✓ to select the distance or reset best value.

The display provides information on how current driving behavior affects the running average and how well recent driving compares to the best that has been achieved for the selected distance.

Economy Trend : Shows history of the Average Fuel Economy from the last 50 km (30 mi). Each bar represents about 5 km (3 mi) of driving. During driving the bars will shift to always reflect the most recent distance on the right side.

Press and hold ✓ to clear the graph or press ✓ to reset through the menu.

Uplevel DIC

DIC Info Page Options

The info pages on the DIC can be turned on or off through the Options menu.

1. Press ◁ to access the cluster applications.
2. Press △ or ▽ to scroll to the Options application.
3. Press ✓ to enter the Options menu.
4. Scroll to Info Pages and press ▷.
5. Press △ or ▽ to move through the list of possible information displays.
6. Press ✓ while an item is highlighted to select or deselect that item. When an item is selected, a checkmark will appear next to it.

DIC Info Pages

The following is the list of all possible DIC info page displays. Some may not be available for your particular vehicle. Some items may not be turned on by default but can be turned on through the Options app. See “DIC Info Page Options” earlier in this section.

Speed : Shows the vehicle speed in either kilometers per hour (km/h) or miles per hour (mph). If equipped, press ▷ to open the menu and select to display the speed limit signs.

Trip A or Trip B : Shows the current distance traveled, in either kilometers (km) or miles (mi), since the trip odometer was last reset. This also shows the approximate average liters per 100 kilometers (L/100 km) or miles per gallon (mpg). This number is calculated based on the number of L/100 km (mpg) recorded since the last time this menu item was reset. This number reflects only the approximate average fuel economy that the vehicle has right now, and will change as driving conditions change.

Press and hold ✓ while this display is active to reset the trip odometer and the average fuel economy. Trip A and Trip B can also be reset by pressing ▷ and choosing reset.

Fuel Information : Fuel Range: Shows the approximate distance the vehicle can be driven without refueling. LOW will be displayed when the vehicle is low on fuel. The fuel range estimate is based on an average of the vehicle's fuel economy over recent driving history and the amount of fuel remaining in the fuel tank.

Oil Life : Shows an estimate of the oil's remaining useful life.
If REMAINING OIL LIFE 99% is displayed, that means 99% of the current oil life remains.

When the remaining oil life is low, the CHANGE ENGINE OIL SOON message will appear on the display. The oil should be changed as soon as possible. See *Engine Oil* ⇨ *269*. In addition to the engine oil life system monitoring the oil life, additional maintenance is recommended. See *Maintenance Schedule* ⇨ *353*.

The Oil Life display must be reset after each oil change. It will not reset itself. Do not to reset the Oil Life display at any time other than when the oil has just been changed. It cannot be reset accurately until the next oil change. To reset the engine oil life system, press and hold ✓ for several seconds while the Oil Life display is active. See *Engine Oil Life System* ⇨ *273*.

Tire Pressure : Shows the approximate pressures of all four tires. Tire pressure is displayed in either kilopascal (kPa) or in pounds per square inch (psi). If the pressure is low, the value for that tire is shown in amber.
See *Tire Pressure Monitor System* ⇨ *309* and *Tire Pressure Monitor Operation* ⇨ *310*.

Average Speed : Displays the average vehicle speed of the vehicle in kilometers per hour (km/h) or miles per hour (mph). This average is based on the various vehicle speeds recorded since the last reset. Reset the average speed by pressing ✓ when it is displayed.

Fuel Economy : The center displays the approximate instantaneous fuel economy as a number and bar graph. Displayed above the bar graph is a running average of fuel economy for the most recently traveled selected distance. Displayed below the bar graph is the best average fuel economy that has been achieved for the selected distance. The selected distance is displayed at the top of the page as “last xxx mi/km.”

Press ▷ to select the distance or reset best value. Use △ and ▽ to choose the distance and press ✓. Press △ and ▽ to select “Reset Best Score.” Press ✓ to reset the best average fuel economy. After reset, the best value displays “-,-” until the selected distance has been traveled.

The display provides information on how current driving behavior affects the running average and how well recent driving compares to the best that has been achieved for the selected distance.

Economy Trend : Shows history of the Average Fuel Economy from the last 50 km (30 mi). Each bar represents about 5 km (3 mi) of driving. During driving the bars will shift to always reflect the most recent distance on the right side.

Press and hold ✓ to clear the graph or press ▷ to reset through the menu.

Timer : This display can be used as a timer. To start the timer, press ✓ while this display is active. The display will show the amount of time that has passed since the timer was last reset. To stop the timer, press ✓ briefly while this display is active and the timer is running. To reset the timer to zero, press and hold ✓ while this display is active, or press ▷ and select reset.

Follow Distance : If equipped, the current follow time to the vehicle ahead is displayed as a time value on this page.

Battery Voltage : Displays the current battery voltage, if equipped. Battery voltage changes are normal while driving. See *Charging System Light* ⇨ *127*. If there is a problem with the battery charging system, a DIC will display a message.

Coolant Temperature : Displays the coolant temperature in degrees Celsius (°C) or degrees Fahrenheit (°F).

Diesel Exhaust Fluid (DEF) Level (Diesel Engine Only) : The DEF level will be displayed as either OK, XX%, or LOW. When LOW appears on the display, add DEF as soon as possible. See *Diesel Exhaust Fluid* ⇨ *198*.

Oil Pressure : Oil pressure is displayed in either kilopascal (kPa) or in pounds per square inch (psi). Oil pressure can vary with engine speed, outside temperature, and oil viscosity. On some models, the oil pump will vary engine oil pressure according to engine needs. Oil pressure may change quickly as the engine speed or load varies. This is normal. If the oil pressure warning light or Driver Information Center (DIC) message indicates oil pressure outside the normal operating range, check the vehicle's oil as soon as possible.

Vehicle Messages

Messages displayed on the DIC indicate the status of the vehicle or some action that may be needed to correct a condition. Multiple messages may appear one after another.

The messages that do not require immediate action can be acknowledged and cleared by pressing ✓. The messages that require immediate action cannot be cleared until that action is performed.

All messages should be taken seriously; clearing the message does not correct the problem.

If a SERVICE message appears, see your dealer.

Follow the instructions given in the messages. The system displays messages regarding the following topics:

- Service Messages
- Fluid Levels
- Vehicle Security

- Brakes
- Ride Control Systems
- Driver Assistance Systems
- Cruise Control
- Lighting and Bulb Replacement
- Wiper/Washer Systems
- Doors and Windows
- Seat Belts
- Airbag Systems
- Engine and Transmission
- Tire Pressure
- Battery

Engine Power Messages

ENGINE POWER IS REDUCED

This message displays when the vehicle's propulsion power is reduced. Reduced propulsion power can affect the vehicle's ability to accelerate. If this message is on, but there is no observed reduction in performance, proceed to your destination. The performance may be reduced the next time the vehicle is driven. The vehicle may be driven while this message is on, but maximum acceleration and speed may be reduced. Anytime this message stays on, or displays repeatedly, the vehicle should be taken to your dealer for service as soon as possible.

Vehicle Speed Messages

SPEED LIMITED TO XXX KM/H (MPH)

This message shows that the vehicle speed has been limited to the speed displayed. The limited speed is a protection for various propulsion and vehicle systems, such as lubrication, thermal, suspension, Teen Driver if equipped, or tires.

If equipped with a diesel engine, see *Diesel Exhaust Fluid* ⇨ *198*.

Vehicle Personalization

The following are all possible vehicle personalization features. Depending on the vehicle, some may not be available.

For System, Apps, and Personal features and functions, see “Settings” in the infotainment manual.

To access the vehicle personalization menu:

1. Touch the Settings icon on the Home Page of the infotainment display.
2. Touch Vehicle to display a list of available options.
3. Touch to select the desired feature setting.
4. Touch ◯ or | to turn a feature off or on.
5. Touch ✕ to go to the top level of the Settings menu.

The menu may contain the following:

Rear Seat Reminder

This allows for a chime and a message when the rear door has been opened before or during operation of the vehicle.

Touch Off or On.

Climate and Air Quality

Touch and the following may display:

- Auto Fan Speed
- Air Quality Sensor
- Auto Cooled Seats
- Auto Heated Seats
- Auto Defog
- Auto Rear Defog

Auto Fan Speed

This setting specifies the amount of airflow when the climate control fan setting is Auto Fan.

Touch Low, Medium, or High.

Air Quality Sensor

This setting switches the system into Recirculation Mode based on the quality of the outside air.

Touch Off, Low Sensitivity, or High Sensitivity.

Auto Cooled Seats

When enabled, this feature will automatically activate ventilated seats at the level required by the interior temperature. See *Heated and Ventilated Front Seats* ⇨ *63*.

Touch Off or On.

Auto Heated Seats

When enabled, this feature will automatically activate the heated seats at the level required by the interior temperature. The auto heated seats can be turned off by using the heated seat buttons on the center console. See *Heated and Ventilated Front Seats* ⇨ *63*.

Touch Off or On.

Auto Defog

This setting automatically turns the front defogger on when the engine is started.

Touch Off or On.

Auto Rear Defog

This setting automatically turns the rear defogger on when the engine is started.

Touch Off or On.

Collision/Detection Systems

Touch and the following may display:

- Alert Type
- Forward Collision System
- Lane Change Alert
- Park Assist
- Rear Camera Park Assist Symbols
- Rear Cross Traffic Alert

Alert Type

This feature will set crash alerts to beeps or seat vibrations. This setting affects all crash alerts including:

- Forward Collision
- Lane Keep Assist
- Parking Assist
- Backing Warning

Touch Beeps or Safety Alert Seat.

Forward Collision System

This feature will turn on or off Forward Collision Alert (FCA) and Forward Automatic Braking (FAB). The Off setting disables all FCA and FAB functions. With the Alert and Brake setting, both FCA and FAB are available. The Alert setting disables FAB. See *Forward Automatic Braking (FAB)* ⇨ *231*.

Touch Off, Alert, or Alert and Brake.

Lane Change Alert

The LCA system is a lane-changing aid that assists drivers with avoiding lane change crashes. See *Lane Change Alert (LCA)* ⇨ *232*.

Touch Off or On.

Park Assist

If equipped, this allows the feature to be turned on or off. See *Assistance Systems for Parking or Backing* ⇨ *223*.

Select Off or On.

Rear Camera Park Assist Symbols

This setting enables the Rear Camera Park Assist Symbols. See *Assistance Systems for Parking or Backing* ⇨ *223*.

Touch Off or On.

Rear Cross Traffic Alert

This allows the Rear Cross Traffic Alert feature to be turned on or off. See *Assistance Systems for Parking or Backing* ⇨ *223*.

Touch Off or On.

Comfort and Convenience

Touch and the following may display:

- Auto Memory Recall
- Easy Exit Options
- Chime Volume
- Hands Free Liftgate Control
- Reverse Tilt Mirror
- Auto Wipe in Reverse Gear
- Extended Hill Start Assist

Auto Memory Recall

This feature automatically recalls the current driver's previously stored 1 or 2 button positions when the ignition is changed from off to on or ACC/ACCESSORY. See *Memory Seats* ⇨ *60*.

Touch Off or On.

Easy Exit Options

This feature automatically recalls the previously stored (Exit) button position when exiting the vehicle. See *Memory Seats* ⇨ *60*.

Touch Off or On.

Chime Volume

This determines the chime volume level.

Touch the controls on the infotainment display to adjust the volume.

Hands Free Liftgate Control

The liftgate may be operated with a kicking motion under the rear bumper between the left exhaust pipe and the license plate. See *Liftgate* ⇨ *41*.

Select Off, On-Open and Close, or On-Open Only.

Reverse Tilt Mirror

When on, the driver and/or passenger mirrors will tilt downward when the vehicle is shifted to R (Reverse) to improve visibility of the ground near the rear wheels. They will return to their previous driving position when the vehicle is shifted out of R (Reverse) or the engine is turned off. See *Reverse Tilt Mirrors* ⇨ *50*.

Touch Off, On - Driver and Passenger, On - Driver, or On - Passenger.

Auto Wipe in Reverse Gear

When on and the front wiper is on, the rear wiper will automatically activate when the vehicle is shifted to R (Reverse).

Select Off or On.

Extended Hill Start Assist

This allows the duration of the Hill Start Assist to be changed.

Select Extended Hold or Standard Hold.

Lighting

Touch and the following may display:

- Vehicle Locator Lights
- Exit Lighting

Vehicle Locator Lights

This feature will flash the exterior lamps and allows some of the exterior lamps and most of the interior lamps to turn on briefly when 🔓 on the Remote Keyless Entry (RKE) transmitter is pressed to locate the vehicle.

Touch Off or On.

Exit Lighting

This allows the selection of how long the exterior lamps stay on when leaving the vehicle when it is dark outside.

Touch Off, 30 Seconds, 60 Seconds, or 120 Seconds.

Power Door Locks

Touch and the following may display:

- Open Door Anti Lockout
- Auto Door Unlock
- Delayed Door Lock

Open Door Anti Lock Out

When on, this feature will keep the driver door from locking when the door is open. If Off is selected, the Delayed Door Lock menu will be available.

Touch Off or On.

Auto Door Unlock

This allows selection of which of the doors will automatically unlock when the vehicle is shifted into P (Park).

Touch Off, All Doors, or Driver Door.

Delayed Door Lock

When on, this feature will delay the locking of the doors. To override the delay, press the power door lock switch on the door.

Touch Off or On.

Remote Lock, Unlock, Start

Touch and the following may display:

- Remote Unlock Light Feedback
- Remote Lock Feedback
- Remote Door Unlock
- Remote Start Auto Cool Seats
- Remote Start Auto Heat Seats
- Remote Window Operation
- Passive Door Unlock
- Passive Door Lock
- Remote Left in Vehicle Alert

Remote Unlock Light Feedback

When on, the exterior lamps will flash when unlocking the vehicle with the RKE transmitter.

Touch Off or Flash Lights.

Remote Lock Feedback

This allows selection of what type of feedback is given when locking the vehicle with the RKE transmitter.

Touch Off, Lights and Horn, Lights Only, or Horn Only.

Remote Door Unlock

This allows selection of which doors will unlock when pressing 🔓 on the RKE transmitter.

Touch All Doors or Driver Door.

Remote Start Auto Cool Seats

If equipped and turned on, this feature will turn on the ventilated seats when using remote start on warm days.
See *Heated and Ventilated Front Seats* ⇨ *63* and *Remote Vehicle Start* ⇨ *35*.

Touch Off or On.

Remote Start Auto Heat Seats

If equipped and turned on, this feature will turn on the heated seats when using remote start on cold days.
See *Heated and Ventilated Front Seats* ⇨ *63* and *Remote Vehicle Start* ⇨ *35*.

Touch Off or On.

Remote Window Operation

This allows the windows to be opened when pressing and holding 🔓 on the RKE transmitter.
See *Remote Keyless Entry (RKE) System Operation* ⇨ *29*.

Touch Off or On.

Passive Door Unlock

This allows the selection of what doors will unlock when using the button on the driver door to unlock the vehicle.

Touch All Doors or Driver Door Only.

Passive Door Lock

This allows passive locking to be turned on or off and selects feedback. See *Remote Keyless Entry (RKE) System Operation* ⇨ *29*.

Touch Off, On with Horn Chirp, or On.

Remote Left in Vehicle Alert

This feature sounds an alert when the RKE transmitter is left in the vehicle. This menu also enables the Remote No Longer In Vehicle Alert.

Touch Off or On.

Teen Driver

See “Teen Driver” under “Settings” in the infotainment manual.

Valet Mode

This will lock the infotainment system and steering wheel controls. It may also limit access to vehicle storage locations, if equipped.

To enable valet mode:

1. Enter a four-digit code on the keypad.
2. Select Enter to go to the confirmation screen.
3. Re-enter the four-digit code.

Touch Lock or Unlock to lock or unlock the system. Touch Back to go back to the previous menu.

Universal Remote System

See *Radio Frequency Statement* ⇨ *379*.

Universal Remote System Programming

If equipped, these buttons are in the overhead console.

This system can replace up to three remote control transmitters used to activate devices such as garage door openers, security systems, and home automation devices. These

instructions refer to a garage door opener, but can be used for other devices.

Do not use the Universal Remote system with any garage door opener that does not have the stop and reverse feature. This includes any garage door opener model manufactured before April 1, 1982.

Read the instructions completely before programming the Universal Remote system. It may help to have another person assist with the programming process.

Keep the original hand-held transmitter for use in other vehicles as well as for future programming. Erase the programming when vehicle ownership is terminated. See “Erasing Universal Remote System Buttons” later in this section.

To program a garage door opener, park outside directly in line with and facing the garage door opener receiver. Clear all people and objects near the garage door.

Make sure the hand-held transmitter has a new battery for quick and accurate transmission of the radio-frequency signal.

Programming the Universal Remote System

For questions or programming help, see www.homelink.com/gm or call 1-800-355-3515.

Programming involves time-sensitive actions, and may time out causing the procedure to be repeated.

To program up to three devices:

1. Hold the end of the hand-held transmitter about 3 to 8 cm (1 to 3 in) away from the Universal Remote system buttons with the indicator light in view. The hand-held transmitter was supplied by the manufacturer of the garage door opener receiver.
2. At the same time, press and hold both the hand-held transmitter button and one of the three Universal Remote system buttons to be used to operate the garage door. Do not release either button until the indicator light goes from a slow to a rapid flashing light. Then release both buttons.

   Some garage door openers may require substitution of Step 2 with the procedure under “Radio Signals for Canada and Some Gate Operators” later in this section.
3. Press and hold the newly programmed Universal Remote system button for five seconds while watching the indicator light and garage door activation.
   - If the indicator light stays on continuously or the garage door moves when the button is pressed, then programming is complete. There is no need to complete Steps 4–6.
   - If the indicator light does not come on or the garage door does not move, a

second button press may be required. For a second time, press and hold the newly programmed button for five seconds. If the light stays on or the garage door moves, programming is complete.

- If the indicator light blinks rapidly for two seconds, then changes to a solid light and the garage door does not move, continue with programming Steps 4–6.

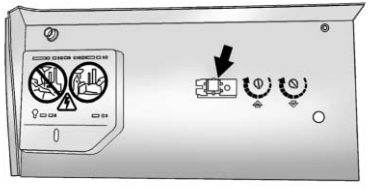

Learn or Smart Button

4. After completing Steps 1–3, locate the Learn or Smart button inside the garage on the garage door opener receiver. The name and color of the button may vary by manufacturer.
5. Press and release the Learn or Smart button. Step 6 must be completed within 30 seconds of pressing this button.
6. Inside the vehicle, press and hold the newly programmed Universal Remote system button for two seconds and then release it. If the garage door does not move or the lamp on the garage door opener receiver does not flash, press and hold the same button a second time for two seconds, then release it. Again, if the door does not move or the garage door lamp does not flash, press and hold the same button a third time for two seconds, then release it.

The Universal Remote system should now activate the garage door.

Repeat the process for programming the two remaining buttons.

Radio Signals for Canada and Some Gate Operators

For questions or programming help, see www.homelink.com/gm or call 1-800-355-3515.

Canadian radio-frequency laws and some U.S. gate operators require transmitter signals to time out or quit after several seconds of transmission. This may not be long enough for the Universal Remote system to pick up the signal during programming.

If the programming did not work, replace Step 2 under “Programming the Universal Remote System” with the following:

Press and hold the Universal Remote system button while pressing and releasing the hand-held transmitter button every two seconds until the signal has been successfully accepted by the Universal Remote system. The Universal Remote system indicator

light will flash slowly at first and then rapidly. Proceed with Step 3 under “Programming the Universal Remote System” to complete.

Universal Remote System Operation

Using the Universal Remote System

Press and hold the appropriate Universal Remote system button for at least one-half second. The indicator light will come on while the signal is being transmitted.

Erasing Universal Remote System Buttons

Erase all programmed buttons when vehicle ownership is terminated.

To erase:

1. Press and hold the two outside buttons until the indicator light begins to flash. This should take about 10 seconds.
2. Release both buttons.

Reprogramming a Single Universal Remote System Button

To reprogram any of the system buttons:

1. Press and hold any one of the buttons. Do not release the button.
2. The indicator light will begin to flash after 20 seconds. Without releasing the button, proceed with Step 1 under “Programming the Universal Remote System.”

Lighting

Exterior Lighting
Exterior Lamp Controls 151
Headlamp High/Low-Beam Changer 153
Flash-to-Pass 153
Daytime Running Lamps (DRL) 153
Automatic Headlamp System 154
Hazard Warning Flashers 154
Turn and Lane-Change Signals 155
Fog Lamps 155

Interior Lighting
Instrument Panel Illumination Control 156
Courtesy Lamps 156
Dome Lamps 156
Reading Lamps 156

Lighting Features
Entry Lighting 157
Exit Lighting 157
Battery Load Management . . . 158
Battery Power Protection 158
Exterior Lighting Battery Saver 158

Exterior Lighting

Exterior Lamp Controls

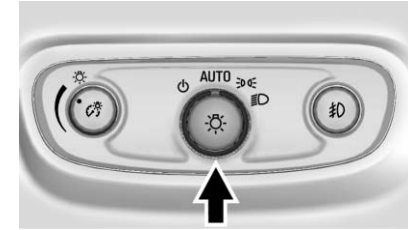

The exterior lamp control is on the instrument panel to the left of the steering column.

There are four positions.

⏻ **:** Turns the exterior lamps off and deactivates the AUTO mode. Turn to ⏻ again to reactivate the AUTO mode.

In Canada, the headlamps will automatically reactivate when the vehicle is shifted out of P (Park).

AUTO : Turns the exterior lamps on and off automatically depending on outside lighting.

: Turns on the parking lamps including all lamps, except the headlamps.

: Turns on the headlamps together with the parking lamps and instrument panel lights.

IntelliBeam® System

If equipped, this system turns the vehicle's high-beam headlamps on and off according to surrounding traffic conditions.

The system turns the high-beam headlamps on when it is dark enough and there is no other traffic present.

This light comes on in the instrument cluster when the IntelliBeam system is enabled.

Turning On and Enabling IntelliBeam

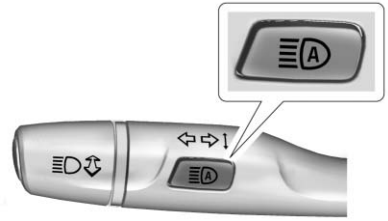

To enable the IntelliBeam system, press on the turn signal lever when it is dark outside and the exterior lamp control is in AUTO or . The blue high-beam on light appears on the instrument cluster when the high beams are on.

Driving with IntelliBeam

The system only activates the high beams when driving over 40 km/h (25 mph).

There is a sensor near the top center of the windshield that automatically controls the system. Keep this area of the windshield clear of debris to allow for best system performance.

The high-beam headlamps remain on, under the automatic control, until one of the following situations occurs:

- The system detects an approaching vehicle's headlamps.
- The system detects a preceding vehicle's taillamps.
- The outside light is bright enough that high-beam headlamps are not required.
- The vehicle's speed drops below 20 km/h (12 mph).
- The IntelliBeam system is disabled by the button on the turn signal lever. If this happens, press on the turn signal lever when the exterior lamp control is in the AUTO or position to reactivate the IntelliBeam system. The

instrument cluster light will come on to indicate the IntelliBeam system is reactivated.

- The IntelliBeam system will turn off if the fog lamps are turned on.

The high beams may not turn off automatically if the system cannot detect another vehicle's lamps because of any of the following:

- The other vehicle's lamps are missing, damaged, obstructed from view, or otherwise undetected.
- The other vehicle's lamps are covered with dirt, snow, and/or road spray.
- The other vehicle's lamps cannot be detected due to dense exhaust, smoke, fog, snow, road spray, mist, or other airborne obstructions.
- The vehicle's windshield is dirty, cracked, or obstructed by something that blocks the view of the light sensor.
- The vehicle is loaded such that the front end points upward, causing the light sensor to aim high and not detect headlamps and taillamps.
- The vehicle is being driven on winding or hilly roads.

The IntelliBeam system may need to be disabled if any of the above conditions exist.

Headlamp High/ Low-Beam Changer

Push the turn signal lever away from you and release, to turn the high beams on. To return to low beams, push the lever again or pull it toward you and release.

This indicator light turns on in the instrument cluster when the high-beam headlamps are on.

Flash-to-Pass

The flash-to-pass feature works with the low beams or Daytime Running Lamps (DRL) on or off.

To flash the high beams, pull the turn signal lever toward you momentarily and then release it.

Daytime Running Lamps (DRL)

DRL can make it easier for others to see the front of your vehicle during the day. Fully functional DRL are required on all vehicles first sold in Canada.

The DRL system comes on in daylight when the following conditions are met:

- The ignition is on.
- The exterior lamp control is in AUTO.
- The vehicle is not in P (Park).
- The light sensor determines it is daytime.

When the DRL are on, the taillamps, sidemarker lamps, instrument panel lights, and other lamps will not be on. The instrument cluster will be lit.

The DRL turn off when the headlamps are turned to ⏻ or the ignition is off. For vehicles first sold in Canada, the DRL can only be turned off when the vehicle is parked.

The regular headlamp system should be turned on when needed.

Automatic Headlamp System

When the exterior lamp control is set to AUTO and it is dark enough outside, the headlamps come on automatically.

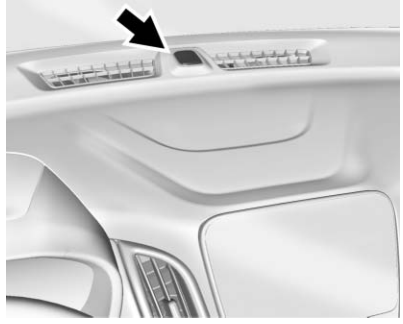

There is a light sensor on top of the instrument panel. Do not cover the sensor; otherwise the headlamps will come on when they are not needed.

The system may also turn on the headlamps when driving through a parking garage or tunnel.

When it is bright enough outside, the headlamps will turn off or may change to Daytime Running Lamps (DRL).

The automatic headlamp system turns off when the exterior lamp control is turned to ⏻ or the ignition is off.

Lights On with Wipers

If the windshield wipers are activated in daylight with the engine on, and the exterior lamp control is in AUTO, the headlamps, parking lamps, and other exterior lamps come on. The transition time for the lamps coming on varies based on wiper speed. When the wipers are not operating, these lamps turn off.

Move the exterior lamp control to ⏻ or ≋ to disable this feature.

Hazard Warning Flashers

⚠ **:** Press to make the front and rear turn signal lamps flash on and off. This warns others that you are having trouble.

Press ⚠ again to turn the flashers off.

Turn and Lane-Change Signals

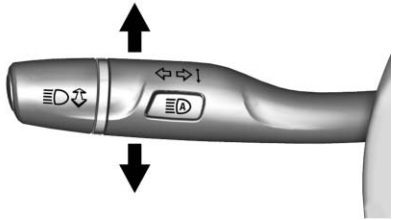

Move the lever all the way up or down to signal a turn.

An arrow on the instrument cluster will flash in the direction of the turn or lane change.

Raise or lower the lever until the arrow starts to flash to signal a lane change. Hold it there until the lane change is complete. If the lever is moved momentarily to the lane change position, the arrow will flash three times.

The lever returns to its starting position when it is released.

If after signaling a turn or lane change, the arrow flashes rapidly or does not come on, a signal bulb may be burned out.

Have any burned out bulbs replaced. If a bulb is not burned out, check the fuse. See *Instrument Panel Fuse Block* ⇨ *296*.

Fog Lamps

The fog lamps button is on the instrument panel beside the steering wheel.

To turn on the fog lamps, the ignition and the headlamps or parking lamps must be on.

: If equipped, press to turn on or off. An indicator light on the instrument cluster comes on when the fog lamps are on.

Some localities have laws that require the headlamps to be on along with the fog lamps.

Interior Lighting

Instrument Panel Illumination Control

The brightness of the instrument cluster display, infotainment display and controls, steering wheel controls, and all other illuminated controls, as well as feature status indicators can be adjusted.

The knob for this feature is on the instrument panel beside the steering column.

Push the knob in all the way until it extends out and then turn the knob clockwise or counterclockwise to brighten or dim the lights.

Courtesy Lamps

The courtesy lamps come on when any door is opened and the OFF indicator light is turned off. See *Dome Lamps* ⇨ *156*.

Dome Lamps

The dome lamp controls are in the overhead console.

To operate, press the following buttons:

OFF : Press to turn off the dome lamps when a door is open. An indicator light on the button will turn on when the dome lamp override is activated. Press OFF again to deactivate this feature and the indicator light will turn off. The dome lamps will come on when doors are opened.

ON/OFF : Press to turn the dome lamps on manually.

Reading Lamps

There are reading lamps on the overhead console and over the rear passenger doors. These lamps come on when any door is opened.

Front Reading Lamps

The front reading lamps are in the overhead console.

Press the lamp lenses to turn the front reading lamps on or off.

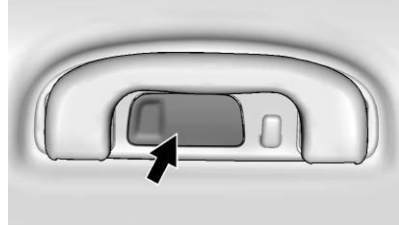

Rear Reading Lamps

Press the lamp lens to turn the rear passenger reading lamps on or off.

Lighting Features

Entry Lighting

Some exterior lamps and interior lamps turn on briefly at night, or in areas with limited lighting, when 🔓 is pressed on the Remote Keyless Entry (RKE) transmitter. When a door is opened, the interior lamps come on. They stay on for about 20 seconds. When all of the doors have been closed or the ignition is turned on, they gradually fade out.

This feature can be changed. See “Vehicle Locator Lights” under *Vehicle Personalization* ⇨ *142*.

Exit Lighting

Some exterior lamps and interior lamps come on at night, or in areas with limited lighting, when the driver door is opened after the ignition is turned off. The dome lamp comes on after the ignition is turned off. The exterior lamps and dome lamp remain on for a set amount of time, then automatically turn off.

The exterior lamps turn off immediately by turning the exterior lamp control off.

This feature can be changed. See *Vehicle Personalization* ⇨ *142*.

Battery Load Management

The vehicle has Electric Power Management (EPM) that estimates the battery's temperature and state of charge. It then adjusts the voltage for best performance and extended life of the battery.

When the battery's state of charge is low, the voltage is raised slightly to quickly bring the charge back up. When the state of charge is high, the voltage is lowered slightly to prevent overcharging. If the vehicle has a voltmeter gauge or a voltage display on the Driver Information Center (DIC), you may see the voltage move up or down. This is normal. If there is a problem, an alert will be displayed.

The battery can be discharged at idle if the electrical loads are very high. This is true for all vehicles. This is because the generator (alternator) may not be spinning fast enough at idle to produce all of the power needed for very high electrical loads.

A high electrical load occurs when several of the following are on, such as: headlamps, high beams, rear window defogger, climate control fan at high speed, heated seats, engine cooling fans, trailer loads, and loads plugged into accessory power outlets.

EPM works to prevent excessive discharge of the battery. It does this by balancing the generator's output and the vehicle's electrical needs. It can increase engine idle speed to generate more power whenever needed. It can temporarily reduce the power demands of some accessories.

Normally, these actions occur in steps or levels, without being noticeable. In rare cases at the highest levels of corrective action, this action may be noticeable to the driver. If so, a DIC message might be displayed and it is recommended that the driver reduce the electrical loads as much as possible.

Battery Power Protection

This feature shuts off the interior lamps if they are left on for more than 10 minutes when the ignition is off. This helps to prevent the battery from running down.

Exterior Lighting Battery Saver

The exterior lamps turn off about 10 minutes after the ignition is turned off, if the parking lamps or headlamps have been manually left on. This protects against draining the battery. To restart the 10-minute timer, turn the exterior lamp control to the off position and then back to the parking lamp or headlamp position.

To keep the lamps on for more than 10 minutes, the ignition must be on or in ACC/ACCESSORY.

Infotainment System

Introduction

Infotainment 159

Introduction

Infotainment

See the infotainment manual for information on the radio, audio players, phone, navigation system, and voice or speech recognition. It also includes information on settings.

Climate Controls

Climate Control Systems
Climate Control Systems 160
Dual Automatic Climate Control System 162

Air Vents
Air Vents 165

Maintenance
Passenger Compartment Air Filter 165
Service 167

Climate Control Systems

With this system the heating, cooling, and ventilation in the vehicle can be controlled.

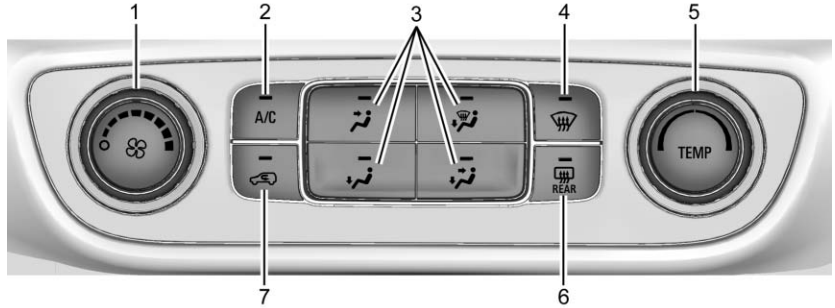

1. Fan Control
2. A/C (Air Conditioning)
3. Air Delivery Mode Controls
4. Defrost
5. TEMP (Temperature Control)
6. Rear Window Defogger
7. Air Recirculation

: Turn clockwise or counterclockwise to increase or decrease the fan speed or turn the fan off.

TEMP : Turn the knob clockwise or counterclockwise to increase or decrease the temperature.

Air Delivery Mode Control : Press , , , or to change the direction of the airflow. An indicator light comes on in the selected mode button.

: Air is directed to the instrument panel outlets.

: Air is divided between the instrument panel and floor outlets.

: Air is directed to the floor outlets, with some to the windshield, side window outlets, and second row floor outlets.

: This mode clears the windows of fog or moisture. Air is directed to the windshield, floor outlets, and side window vents.

: Press to clear the windshield of fog or frost more quickly. Air is directed to the windshield and the side window vents. The air conditioning compressor also comes on, unless the outside temperature is below freezing.

Do not drive the vehicle until all windows are clear.

See *Air Vents* ⇨ *165*.

A/C : Press to turn the air conditioning system on or off. An indicator light comes on to show that the air conditioning is enabled. The A/C light will stay on even if the outside temperatures are below freezing and the compressor does not run. If the fan is turned off, the air conditioner will not run.

: Press to turn on recirculation. An indicator light comes on. Air is recirculated to quickly cool the inside of the vehicle. It can also be used to help reduce outside air and odors that enter the vehicle.

Rear Window Defogger

The rear window defogger uses a warming grid to remove fog from the rear window.

REAR **:** Press to turn the rear window defogger on or off. An indicator light on the button comes on to show that the rear window defogger is on.

The rear window defogger only works when the ignition is on. The defogger turns off if the ignition is turned to off or to ACC/ ACCESSORY.

Caution

Using a razor blade or sharp object to clear the inside rear window can damage the rear window defogger. Repairs would not be covered by the vehicle warranty. Do not clear the inside rear window with sharp objects.

Heated Mirror : If equipped with heated outside mirrors, the mirrors heat to help clear fog or frost from the surface of the mirror when the rear window defog button is pressed. See *Heated Mirrors* ⇨ *49*.

Dual Automatic Climate Control System

With this system the heating, cooling, and ventilation in the vehicle can be controlled.

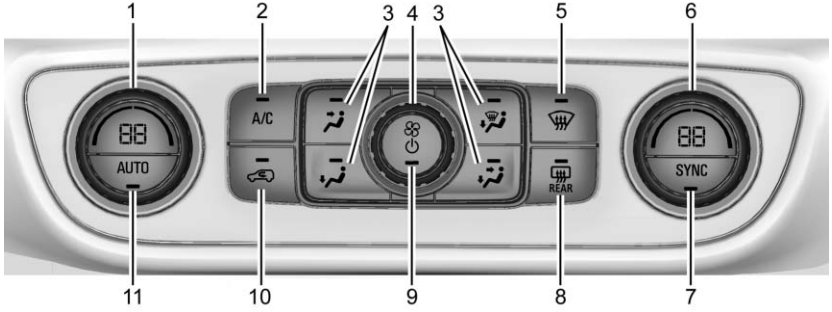

1. Driver Temperature Control
2. A/C (Air Conditioning)
3. Air Delivery Mode Controls
4. Fan Control
5. Defrost
6. Passenger Temperature Control
7. SYNC (Synchronized Temperature)
8. Rear Window Defogger
9. Power Button
10. Air Recirculation
11. AUTO (Automatic Operation)

Automatic Operation

The system automatically controls the following four functions to heat or cool the vehicle to the desired temperature:

- Fan Speed
- Air Delivery Mode
- Air Conditioning
- Recirculation

When the AUTO indicator light is lit, all four functions are operating automatically. Each function can be manually set and the selected setting will be shown. This cancels full automatic operation and the AUTO indicator light turns off. Functions that are not manually set will continue to be automatically controlled, although the AUTO indicator light will not be lit.

To place the system in automatic mode:

1. Press AUTO.
2. Set the driver and passenger temperature.

   To find your comfort setting, start with 22 °C (72 °F) and allow the system time to stabilize. Then adjust the temperature as needed for best comfort.

To improve fuel efficiency and to cool the vehicle faster, recirculation may be automatically selected in warm weather.

The recirculation light will not come on when automatically controlled.

Press to manually select recirculation; press it again to select outside air.

Do not cover the solar sensor on the top of the instrument panel near the windshield. This sensor regulates air temperature based on sun load. See “Sensors” later in this section.

Manual Operation

: Press to turn the climate control system on or off. When off, no air will flow into the vehicle. Turning the fan on, pressing any other button, or turning a knob will turn the system back on.

: Turn clockwise or counterclockwise to increase or decrease the fan speed. Press the knob to turn the fan off.

Press AUTO to return to automatic operation.

Driver and Passenger Temperature Control : The temperature can be adjusted separately for the driver and passenger.

Turn the knob clockwise or counterclockwise to increase or decrease the driver or passenger temperature setting.

SYNC : Press to link the passenger temperature settings to the driver setting. The SYNC indicator light will turn on. When the passenger temperature settings are adjusted, the SYNC indicator light is off.

The driver side or passenger side temperature display shows the temperature setting increasing or decreasing.

Air Delivery Mode Control : Press , , , or to change the direction of the airflow. An indicator light comes on in the selected mode button.

Changing the mode cancels the automatic operation and the system goes into manual mode. Press AUTO to return to automatic operation.

: Air is directed to the instrument panel outlets.

: Air is divided between the instrument panel and floor outlets.

: Air is directed to the floor outlets, with some to the windshield, side window outlets, and second row floor outlets.

: This mode clears the windows of fog or moisture. Air is directed to the windshield, floor outlets, and side window vents.

: Press to clear the windshield of fog or frost more quickly. Air is directed to the windshield and the side window vents. The air conditioning compressor also comes on, unless the outside temperature is below freezing.

Do not drive the vehicle until all windows are clear.

See *Air Vents* ⇨ *165*.

A/C : Press to turn the air conditioning system on or off. An indicator light comes on to show that the air conditioning is enabled. If the fan is turned off, the air conditioner will not run. The A/C light will stay on even if the outside temperatures are below freezing and the A/C compressor may be off.

: Press to turn on recirculation. An indicator light comes on. Air is recirculated to quickly cool the inside of the vehicle. It can also be used to help reduce outside air and odors that enter the vehicle.

Rear Window Defogger

The rear window defogger uses a warming grid to remove fog from the rear window.

REAR **:** Press to turn the rear window defogger on or off. An indicator light on the button comes on to show that the rear window defogger is on.

The rear window defogger only works when the ignition is on. The defogger turns off if the ignition is turned off or to ACC/ACCESSORY.

Caution

Using a razor blade or sharp object to clear the inside rear window can damage the rear window defogger. Repairs would not be covered by the vehicle warranty. Do not clear the inside rear window with sharp objects.

Heated Mirror : If equipped with heated outside mirrors, the mirrors heat to help clear fog or frost from the surface of the mirror when the rear window defog button is pressed. See *Heated Mirrors* ⇨ *49*.

Sensor

The solar sensor on top of the instrument panel near the windshield, monitors the solar heat.

The climate control system uses the sensor information to adjust the temperature, fan speed, recirculation, and air delivery mode for best comfort.

Do not cover the sensor; otherwise the automatic climate control system may not work properly.

Air Vents

Use the louvers located on the air vents to change the direction of the airflow.

To open or close off the airflow:

- On the center air vents, move the slider knobs up or down.
- On the outer and rear air vents, move the slider knobs right or left.

Operation Tips

- Clear away any ice, snow, or leaves from air inlets at the base of the windshield that could block the flow of air into the vehicle.
- Clear snow off the hood to improve visibility and help decrease moisture drawn into the vehicle, which may improve long term system performance.
- Keep the path under the front seats clear of objects to help circulate the air inside of the vehicle more effectively.
- Use of non-GM approved hood deflectors can adversely affect the performance of the system. Check with your dealer before adding equipment to the outside of the vehicle.
- Do not attach any devices to the air vent slats. This restricts airflow and may cause damage to the air vents.

Maintenance

Passenger Compartment Air Filter

The filter removes dust, pollen, and other airborne irritants from outside air that is pulled into the vehicle.

The filter should be replaced as part of routine scheduled maintenance. See *Maintenance Schedule* ⇨ *353*. To find out what type of filter to use, see *Maintenance Replacement Parts* ⇨ *362*.

1. Open the glove box.

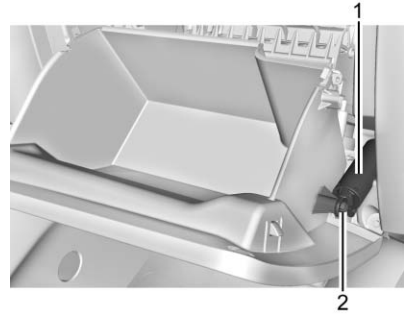

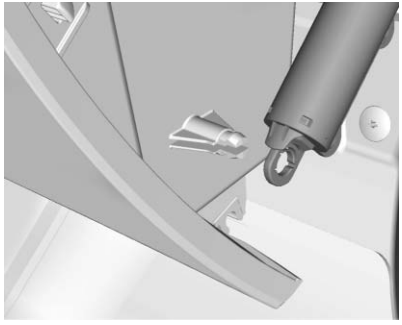

2. Disconnect the glove box door damper (1) from the glove box door assembly by squeezing the pivot (2) to release the damper ring.

3. Squeeze both sides of the glove box bin inward to lower beyond the stops.

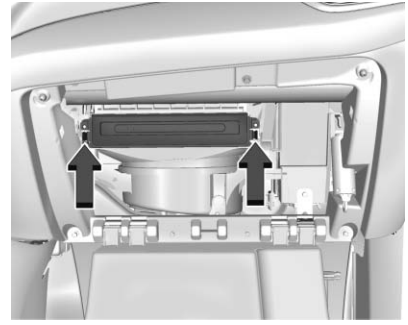

4. Press the latches on either side of the service door inward to release. Open the service door and remove the old filter.
5. Install the new air filter.
6. Close the service door completely.
7. Reverse the steps to reinstall the glove box.

See your dealer if additional assistance is needed.

Service

All vehicles have a label underhood that identifies the refrigerant used in the vehicle. The refrigerant system should only be serviced by trained and certified technicians. The air conditioning evaporator should never be repaired or replaced by one from a salvage vehicle.
It should only be replaced by a new evaporator to ensure proper and safe operation.

During service, all refrigerants should be reclaimed with proper equipment. Venting refrigerants directly to the atmosphere is harmful to the environment and may also create unsafe conditions based on inhalation, combustion, frostbite, or other health-based concerns.

Driving and Operating

Driving Information
Driver Behavior 169
Driving Environment 170
Vehicle Design 170
Distracted Driving 170
Defensive Driving 171
Drunk Driving 171
Control of a Vehicle 171
Braking 171
Steering 172
Off-Road Recovery 173
Loss of Control 173
Off-Road Driving 174
Driving on Wet Roads 178
Hill and Mountain Roads 179
Winter Driving 179
If the Vehicle Is Stuck 180
Vehicle Load Limits 181

Starting and Operating
New Vehicle Break-In 185
Ignition Positions 186
Starting the Engine 188
Engine Heater 191
Retained Accessory Power (RAP) 192
Shifting Into Park 192
Shifting out of Park 193
Parking over Things That Burn 196
Extended Parking 196

Engine Exhaust
Engine Exhaust 196
Running the Vehicle While Parked 197

Diesel Particulate Filter
Diesel Particulate Filter 197

Diesel Exhaust Fluid
Diesel Exhaust Fluid 198

Automatic Transmission
Automatic Transmission 204
Manual Mode 208
Tow/Haul Mode 209

Drive Systems
All-Wheel Drive 209

Brakes
Antilock Brake System (ABS) 210
Electric Parking Brake 210
Brake Assist 212
Hill Start Assist (HSA) 212

Ride Control Systems
Traction Control/Electronic Stability Control 213
Hill Descent Control (HDC) . . . 216
Driver Mode Control 216

Cruise Control
Cruise Control 220

Driver Assistance Systems
Driver Assistance Systems . . . 222
Assistance Systems for Parking or Backing 223
Assistance Systems for Driving 228
Forward Collision Alert (FCA) System 228
Forward Automatic Braking (FAB) 231
Side Blind Zone Alert (SBZA) 232
Lane Change Alert (LCA) 232
Lane Departure Warning (LDW) 234
Lane Keep Assist (LKA) 234

Fuel
Fuel (Gasoline) 236
California Fuel Requirements (Gasoline) 237

Fuels in Foreign Countries (Gasoline) 238
Fuel Additives 238
Fuel for Diesel Engines 238
What Fuel to Use in the U.S. (Diesel) 239
What Fuel to Use in Canada and Mexico (Diesel) 240
Biodiesel 241
Cold Weather Operation (Diesel) 242
Water in Fuel (Diesel) 243
Running Out of Fuel (Diesel) 246
Fuel Filter Replacement (Diesel) 246
Filling the Tank (Gasoline) 247
Filling the Tank (Diesel) 248
Filling a Portable Fuel Container 250

Trailer Towing
General Towing Information 251
Driving Characteristics and Towing Tips 251
Trailer Towing 254
Towing Equipment 256
Trailer Sway Control (TSC) . . . 257

Conversions and Add-Ons
Add-On Electrical Equipment 257

Driving Information

Driver Behavior

Driving is an important responsibility. Driver behavior, the driving environment, and the vehicle's design all affect how well a vehicle performs.

Being aware of these factors can help in understanding how the vehicle handles and what can be done to avoid many types of crashes, including a rollover crash.

Most serious injuries and fatalities to unbelted occupants can be reduced or prevented by the use of seat belts. In a rollover crash, an unbelted person is significantly more likely to die than a person wearing a seat belt. In addition, avoiding excessive speed, sudden or abrupt turns, and drunken or aggressive driving can help make trips safer and avoid the possibility of a crash.

Driving Environment

Be prepared for driving in inclement weather, at night, or during other times where visibility or traction may be limited, such as on curves, slippery roads, or hilly terrain. Unfamiliar surroundings can also have hidden hazards.

Learn more about driving in different conditions and off-road driving in this section.

Vehicle Design

Utility vehicles have a significantly higher rollover rate than other types of vehicles. This is because they have a higher ground clearance and a narrower track or shorter wheelbase than passenger cars, which makes them more capable for off-road driving. While these design characteristics provide the driver with a better view of the road, these vehicles do have a higher center of gravity than other types of vehicles. A utility vehicle does not handle the same as a vehicle with a lower center of gravity, like a car, in similar situations.

Safe driver behavior and understanding of the environment can help avoid a rollover crash in any type of vehicle, including utility vehicles.

Distracted Driving

Distraction comes in many forms and can take your focus from the task of driving. Exercise good judgment and do not let other activities divert your attention away from the road. Many local governments have enacted laws regarding driver distraction. Become familiar with the local laws in your area.

To avoid distracted driving, keep your eyes on the road, keep your hands on the steering wheel, and focus your attention on driving.

- Do not use a phone in demanding driving situations. Use a hands-free method to place or receive necessary phone calls.
- Watch the road. Do not read, take notes, or look up information on phones or other electronic devices.
- Designate a front seat passenger to handle potential distractions.
- Become familiar with vehicle features before driving, such as programming favorite radio stations and adjusting climate control and seat settings. Program all trip information into any navigation device prior to driving.
- Wait until the vehicle is parked to retrieve items that have fallen to the floor.

- Stop or park the vehicle to tend to children.
- Keep pets in an appropriate carrier or restraint.
- Avoid stressful conversations while driving, whether with a passenger or on a cell phone.

⚠ Warning

Taking your eyes off the road too long or too often could cause a crash resulting in injury or death. Focus your attention on driving.

Refer to the infotainment section for more information on using that system and the navigation system, if equipped, including pairing and using a cell phone.

Defensive Driving

Defensive driving means “always expect the unexpected.” The first step in driving defensively is to wear the seat belt. See *Seat Belts* ⇨ *69*.

- Assume that other road users (pedestrians, bicyclists, and other drivers) are going to be careless and make mistakes. Anticipate what they might do and be ready.
- Allow enough following distance between you and the driver in front of you.
- Focus on the task of driving.

Drunk Driving

Death and injury associated with drinking and driving is a global tragedy.

⚠ Warning

Drinking and then driving is very dangerous. Your reflexes, perceptions, attentiveness, and judgment can be affected by even a small amount of alcohol. You can have a serious — or even fatal — collision if you drive after drinking.

(Continued)

Warning (Continued)

Do not drink and drive or ride with a driver who has been drinking. Ride home in a cab; or if you are with a group, designate a driver who will not drink.

Control of a Vehicle

Braking, steering, and accelerating are important factors in helping to control a vehicle while driving.

Braking

Braking action involves perception time and reaction time. Deciding to push the brake pedal is perception time. Actually doing it is reaction time.

Average driver reaction time is about three-quarters of a second. In that time, a vehicle moving at 100 km/h (60 mph) travels 20 m (66 ft), which could be a lot of distance in an emergency.

Helpful braking tips to keep in mind include:

- Keep enough distance between you and the vehicle in front of you.
- Avoid needless heavy braking.
- Keep pace with traffic.

If the engine ever stops while the vehicle is being driven, brake normally but do not pump the brakes. Doing so could make the pedal harder to push down. If the engine stops, there will be some power brake assist but it will be used when the brake is applied. Once the power assist is used up, it can take longer to stop and the brake pedal will be harder to push.

Steering

Electric Power Steering

The vehicle has electric power steering. It does not have power steering fluid. Regular maintenance is not required.

If power steering assist is lost due to a system malfunction, the vehicle can be steered, but may require increased effort.

If the steering assist is used for an extended period of time while the vehicle is not moving, power assist may be reduced.

If the steering wheel is turned until it reaches the end of its travel and is held against that position for an extended period of time, power steering assist may be reduced.

Normal use of the power steering assist should return when the system cools down.

See your dealer if there is a problem.

Curve Tips

- Take curves at a reasonable speed.
- Reduce speed before entering a curve.
- Maintain a reasonable steady speed through the curve.
- Wait until the vehicle is out of the curve before accelerating gently into the straightaway.

Steering in Emergencies

- There are some situations when steering around a problem may be more effective than braking.
- Holding both sides of the steering wheel allows you to turn 180 degrees without removing a hand.
- The Antilock Brake System (ABS) allows steering while braking.

Off-Road Recovery

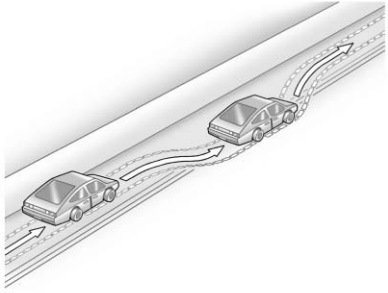

The vehicle's right wheels can drop off the edge of a road onto the shoulder while driving. Follow these tips:

1. Ease off the accelerator and then, if there is nothing in the way, steer the vehicle so that it straddles the edge of the pavement.
2. Turn the steering wheel about one-eighth of a turn, until the right front tire contacts the pavement edge.
3. Turn the steering wheel to go straight down the roadway.

Loss of Control

Skidding

There are three types of skids that correspond to the vehicle's three control systems:

- Braking Skid — wheels are not rolling.
- Steering or Cornering Skid — too much speed or steering in a curve causes tires to slip and lose cornering force.
- Acceleration Skid — too much throttle causes the driving wheels to spin.

Defensive drivers avoid most skids by taking reasonable care suited to existing conditions, and by not overdriving those conditions. But skids are always possible.

If the vehicle starts to slide, follow these suggestions:

- Ease your foot off the accelerator pedal and steer the way you want the vehicle to go. The vehicle may straighten out. Be ready for a second skid if it occurs.
- Slow down and adjust your driving according to weather conditions. Stopping distance can be longer and vehicle control can be affected when traction is reduced by water, snow, ice, gravel, or other material on the road. Learn to recognize warning clues — such as enough water, ice, or packed snow on the road to make a mirrored surface — and slow down when you have any doubt.
- Try to avoid sudden steering, acceleration, or braking, including reducing vehicle speed by shifting to a lower gear. Any sudden changes could cause the tires to slide.

Remember: Antilock brakes help avoid only the braking skid.

Off-Road Driving

All-wheel-drive vehicles can be used for off-road driving. Vehicles without all-wheel drive and vehicles not equipped with All Terrain (AT) or On-Off Road (OOR) tires must not be driven off-road except on a level, solid surface. To contact the tire manufacturer for more information about the original equipment tires, see the warranty manual.

Controlling the vehicle is the key to successful off-road driving. One of the best ways to control the vehicle is to control the speed.

⚠ Warning

When driving off-road, bouncing and quick changes in direction can easily throw you out of position. This could cause you to lose control and crash. You and your passengers should always wear seat belts.

Before Driving Off-Road

- Have all necessary maintenance and service work completed.
- Fuel the vehicle, fill fluid levels, and check inflation pressure in all tires, including the spare, if equipped.
- Read all the information about all-wheel-drive vehicles in this manual.
- Make sure all underbody shields, if equipped, are properly attached.
- Know the local laws that apply to off-road driving.

Loading the Vehicle for Off-Road Driving

⚠ Warning

- Unsecured cargo on the load floor can be tossed about when driving over rough terrain. You or your

(Continued)

Warning (Continued)

passengers can be struck by flying objects. Secure the cargo properly.

- Keep cargo in the cargo area as far forward and as low as possible. The heaviest things should be on the floor, forward of the rear axle.
- Heavy loads on the roof raise the vehicle's center of gravity, making it more likely to roll over. You can be seriously or fatally injured if the vehicle rolls over. Put heavy loads inside the cargo area, not on the roof.

For more information about loading the vehicle, see *Vehicle Load Limits* ⇨ *181*.

Environmental Concerns

- Always use established trails, roads, and areas that have been set aside for public off-road recreational driving and obey all posted regulations.
- Do not damage shrubs, flowers, trees, or grasses or disturb wildlife.
- Do not park over things that burn. See *Parking over Things That Burn* ⇨ *196*.

Driving on Hills

Driving safely on hills requires good judgment and an understanding of what the vehicle can and cannot do.

⚠ Warning

Many hills are simply too steep for any vehicle. Driving up hills can cause the vehicle to stall. Driving down hills can cause loss of control. Driving across hills can

(Continued)

Warning (Continued)

cause a rollover. You could be injured or killed. Do not drive on steep hills.

Before driving on a hill, assess the steepness, traction, and obstructions. If the terrain ahead cannot be seen, get out of the vehicle and walk the hill before driving further.

When driving on hills:

- Use a low gear and keep a firm grip on the steering wheel.
- Maintain a slow speed.
- When possible, drive straight up or down the hill.
- Slow down when approaching the top of the hill.
- Use headlamps even during the day to make the vehicle more visible.

⚠ Warning

Driving to the top of a hill at high speed can cause an accident. There could be a drop-off, embankment, cliff, or even another vehicle. You could be seriously injured or killed. As you near the top of a hill, slow down and stay alert.

- Never go downhill forward or backward with the transmission in N (Neutral). The brakes could overheat and you could lose control.
- When driving down a hill, keep the vehicle headed straight down. Use a low gear because the engine will work with the brakes to slow the vehicle and help keep the vehicle under control.

⚠ Warning

Heavy braking when going down a hill can cause your brakes to overheat and fade. This could cause loss of control and you or others could be injured or killed. Apply the brakes lightly when descending a hill and use a low gear to keep vehicle speed under control.

If the vehicle stalls on a hill:

1. Apply the brakes to stop the vehicle, and then apply the parking brake.
2. Shift into P (Park) and then restart the engine.
   - If driving uphill when the vehicle stalls, shift to R (Reverse), release the parking brake, and back straight down.
   - Never try to turn the vehicle around. If the hill is steep enough to stall the vehicle, it is steep enough to cause it to roll over.
   - If you cannot make it up the hill, back straight down the hill.
   - Never back down a hill in N (Neutral) using only the brake. The vehicle can roll backward quickly and you could lose control.
   - If driving downhill when the vehicle stalls, shift to a lower gear, release the parking brake, and drive straight down the hill.
3. If the vehicle cannot be restarted after stalling, set the parking brake, shift into P (Park), and turn the vehicle off.
   3.1. Leave the vehicle and seek help.
   3.2. Stay clear of the path the vehicle would take if it rolled downhill.

- Avoid turns that take the vehicle across the incline of the hill. A hill that can be driven straight up or down might be too steep to drive across. Driving across an incline puts more weight on the downhill wheels which could cause a downhill slide or a rollover.
- Surface conditions can be a problem. Loose gravel, muddy spots, or even wet grass can cause the tires to slip sideways, downhill. If the vehicle slips sideways, it can hit something that will trip it — a rock, a rut, etc. — and roll over.
- Hidden obstacles can make the steepness of the incline more severe. If a rock is driven across with the uphill wheels, or if the downhill wheels drop into a rut or depression, the vehicle can tilt even more.

- If an incline must be driven across, and the vehicle starts to slide, turn downhill. This should help straighten out the vehicle and prevent the side slipping.

⚠ Warning

Getting out of the vehicle on the downhill side when stopped across an incline is dangerous. If the vehicle rolls over, you could be crushed or killed. Always get out on the uphill side of the vehicle and stay well clear of the rollover path.

Driving in Mud, Sand, Snow, or Ice

Use a low gear when driving in mud — the deeper the mud, the lower the gear. Keep the vehicle moving to avoid getting stuck.

Traction changes when driving on sand. On loose sand, such as on beaches or sand dunes, the tires tend to sink into the sand. This affects steering, accelerating, and braking. Drive at a reduced speed and avoid sharp turns or abrupt maneuvers.

Traction is reduced on hard packed snow and ice and it is easy to lose control. Reduce vehicle speed when driving on hard packed snow and ice.

⚠ Warning

Driving on frozen lakes, ponds, or rivers can be dangerous. Ice conditions vary greatly and the vehicle could fall through the ice; you and your passengers could drown. Drive your vehicle on safe surfaces only.

Driving in Water

⚠ Warning

Driving through rushing water can be dangerous. Deep water can sweep your vehicle downstream and you and your passengers

(Continued)

Warning (Continued)

could drown. If it is only shallow water, it can still wash away the ground from under your tires. Traction could be lost, and the vehicle could roll over. Do not drive through rushing water.

Caution

Do not drive through standing water if it is deep enough to cover the wheel hubs, axles, or exhaust pipe. Deep water can damage the axle and other vehicle parts.

If the standing water is not too deep, drive through it slowly. At faster speeds, water can get into the engine and cause it to stall. Stalling can occur if the exhaust pipe is under water. Do not turn off the ignition when driving through water. If the exhaust pipe is under water, the engine will not start. When going

through water, the brakes get wet and it may take longer to stop. See *Driving on Wet Roads* ⇨ *178*.

After Off-Road Driving

Remove any brush or debris that has collected on the underbody or chassis, or under the hood. These accumulations can be a fire hazard.

After operation in mud or sand, have the brake linings cleaned and checked. These substances can cause glazing and uneven braking. Check the body structure, steering, suspension, wheels, tires, and exhaust system for damage and check the fuel lines and cooling system for any leakage.

More frequent maintenance service is required. See the *Maintenance Schedule* ⇨ *353*.

Driving on Wet Roads

Rain and wet roads can reduce vehicle traction and affect your ability to stop and accelerate. Always drive slower in these types of driving conditions and avoid driving through large puddles and deep-standing or flowing water.

⚠ Warning

Wet brakes can cause crashes. They might not work as well in a quick stop and could cause pulling to one side. You could lose control of the vehicle.

After driving through a large puddle of water or a car/vehicle wash, lightly apply the brake pedal until the brakes work normally.

Flowing or rushing water creates strong forces. Driving through flowing water could cause the vehicle to be carried away. If this happens, you and other vehicle occupants could drown. Do not ignore police warnings and be very cautious about trying to drive through flowing water.

Hydroplaning

Hydroplaning is dangerous. Water can build up under the vehicle's tires so they actually ride on the water. This can happen if the road is wet enough and you are going fast enough. When the vehicle is hydroplaning, it has little or no contact with the road.

There is no hard and fast rule about hydroplaning. The best advice is to slow down when the road is wet.

Other Rainy Weather Tips

Besides slowing down, other wet weather driving tips include:

- Allow extra following distance.
- Pass with caution.
- Keep windshield wiping equipment in good shape.
- Keep the windshield washer fluid reservoir filled.
- Have good tires with proper tread depth. See *Tires* ⇨ *300*.
- Turn off cruise control.

Hill and Mountain Roads

Driving on steep hills or through mountains is different than driving on flat or rolling terrain. Tips include:

- Keep the vehicle serviced and in good shape.
- Check all fluid levels and brakes, tires, cooling system, and transmission.
- Shift to a lower gear when going down steep or long hills.

⚠ Warning

Using the brakes to slow the vehicle on a long downhill slope can cause brake overheating, can reduce brake performance, and could result in a loss of braking. Shift the transmission to a lower gear to let the engine assist the brakes on a steep downhill slope.

⚠ Warning

Coasting downhill in N (Neutral) or with the ignition off is dangerous. This can cause overheating of the brakes and loss of steering assist. Always have the engine running and the vehicle in gear.

- Drive at speeds that keep the vehicle in its own lane. Do not swing wide or cross the center line.
- Be alert on top of hills; something could be in your lane (e.g., stalled car, accident).
- Pay attention to special road signs (e.g., falling rocks area, winding roads, long grades, passing or no-passing zones) and take appropriate action.

Winter Driving

Driving on Snow or Ice

Snow or ice between the tires and the road creates less traction or grip, so drive carefully. Wet ice can occur at about 0 °C (32 °F) when freezing rain begins to fall. Avoid driving on wet ice or in freezing rain until roads can be treated.

For Slippery Road Driving:

- Accelerate gently. Accelerating too quickly causes the wheels to spin and makes the surface under the tires slick.
- Turn on Traction Control. See *Traction Control/Electronic Stability Control* ⇨ *213*.
- The Antilock Brake System (ABS) improves vehicle stability during hard stops, but the brakes should be applied sooner than when on dry pavement. See *Antilock Brake System (ABS)* ⇨ *210*.

- Allow greater following distance and watch for slippery spots. Icy patches can occur on otherwise clear roads in shaded areas. The surface of a curve or an overpass can remain icy when the surrounding roads are clear. Avoid sudden steering maneuvers and braking while on ice.
- Turn off cruise control.

Blizzard Conditions

Stop the vehicle in a safe place and signal for help. Stay with the vehicle unless there is help nearby.
If possible, use Roadside Assistance. See *Roadside Assistance Program* ⇨ *373*. To get help and keep everyone in the vehicle safe:

- Turn on the hazard warning flashers.
- Tie a red cloth to an outside mirror.

⚠ Warning

Snow can trap engine exhaust under the vehicle. This may cause exhaust gases to get inside. Engine exhaust contains carbon monoxide (CO), which cannot be seen or smelled. It can cause unconsciousness and even death.

If the vehicle is stuck in snow:

- Clear snow from the base of the vehicle, especially any blocking the exhaust pipe.
- Open a window about 5 cm (2 in) on the vehicle side that is away from the wind, to bring in fresh air.
- Fully open the air outlets on or under the instrument panel.
- Adjust the climate control system to circulate the air inside the vehicle and set

(Continued)

Warning (Continued)

the fan speed to the highest setting. See “Climate Control Systems.”

For more information about CO, see *Engine Exhaust* ⇨ *196*.

To save fuel, run the engine for short periods to warm the vehicle and then shut the engine off and partially close the window. Moving about to keep warm also helps.

If it takes time for help to arrive, when running the engine, push the accelerator pedal slightly so the engine runs faster than the idle speed. This keeps the battery charged to restart the vehicle and to signal for help with the headlamps. Do this as little as possible, to save fuel.

If the Vehicle Is Stuck

Slowly and cautiously spin the wheels to free the vehicle when stuck in sand, mud, ice, or snow.

If stuck too severely for the traction system to free the vehicle, turn the traction system off and use the rocking method. See *Traction Control/Electronic Stability Control* ⇨ *213*.

⚠ Warning

If the vehicle's tires spin at high speed, they can explode, and you or others could be injured. The vehicle can overheat, causing an engine compartment fire or other damage. Spin the wheels as little as possible and avoid going above 56 km/h (35 mph).

Rocking the Vehicle to Get it Out

Turn the steering wheel left and right to clear the area around the front wheels. Turn off any traction system. Shift back and forth between R (Reverse) and a low forward gear, spinning the wheels as little as possible. To prevent transmission wear, wait until the wheels stop spinning before shifting gears. Release the accelerator pedal while shifting, and press lightly on the accelerator pedal when the transmission is in gear. Slowly spinning the wheels in the forward and reverse directions causes a rocking motion that could free the vehicle. If that does not get the vehicle out after a few tries, it might need to be towed out. If the vehicle does need to be towed out, see *Towing the Vehicle* ⇨ *337*.

Vehicle Load Limits

It is very important to know how much weight the vehicle can carry. This weight is called the vehicle capacity weight and includes the weight of all occupants, cargo, and all nonfactory-installed options. Two labels on the vehicle may show how much weight it may properly carry, the Tire and Loading Information label and the Certification/Tire label.

⚠ Warning

Do not load the vehicle any heavier than the Gross Vehicle Weight Rating (GVWR), or either the maximum front or rear Gross Axle Weight Rating (GAWR). This can cause systems to break and change the way the vehicle handles. This could cause loss of control and a crash. Overloading can also reduce stopping distance, damage the tires, and shorten the life of the vehicle.

Tire and Loading Information Label

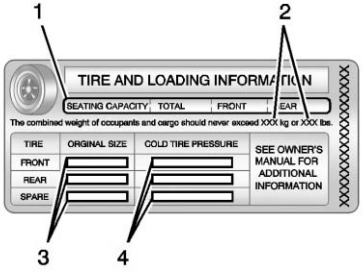

Example Label

A vehicle-specific Tire and Loading Information label is attached to the center pillar (B-pillar). The tire and loading information label shows the number of occupant seating positions (1), and the maximum vehicle capacity weight (2) in kilograms and pounds.

The Tire and Loading Information label also shows the size of the original equipment tires (3) and the recommended cold tire inflation pressures (4). For more information on tires and inflation see *Tires* ⇨ *300* and *Tire Pressure* ⇨ *307*.

There is also important loading information on the vehicle Certification/Tire label. It may show the Gross Vehicle Weight Rating (GVWR) and the Gross Axle Weight Rating (GAWR) for the front and rear axle. See “Certification/Tire Label” later in this section.

“Steps for Determining Correct Load Limit–

1. Locate the statement "The combined weight of occupants and cargo should never exceed XXX kg or XXX lbs." on your vehicle’s placard.
2. Determine the combined weight of the driver and passengers that will be riding in your vehicle.
3. Subtract the combined weight of the driver and passengers from XXX kg or XXX lbs.
4. The resulting figure equals the available amount of cargo and luggage load capacity. For example, if the "XXX" amount equals 1400 lbs. and there will be five 150 lb passengers in your vehicle, the amount of available cargo and luggage load capacity is 650 lbs. (1400-750 (5 x 150) = 650 lbs.)
5. Determine the combined weight of luggage and cargo being loaded on the vehicle. That weight may not safely exceed the available cargo and luggage load capacity calculated in Step 4.

6. If your vehicle will be towing a trailer, load from your trailer will be transferred to your vehicle. Consult this manual to determine how this reduces the available cargo and luggage load capacity of your vehicle.”

See *Trailer Towing* ⇨ *254* for important information on towing a trailer, towing safety rules and trailering tips.

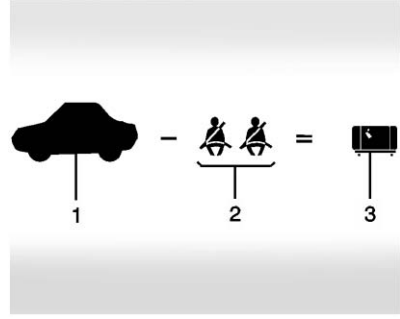

Example 1

1. Vehicle Capacity Weight for Example 1 = 453 kg (1,000 lbs).
2. Subtract Occupant Weight @ 68 kg (150 lbs) × 2 = 136 kg (300 lbs).
3. Available Occupant and Cargo Weight = 317 kg (700 lbs).

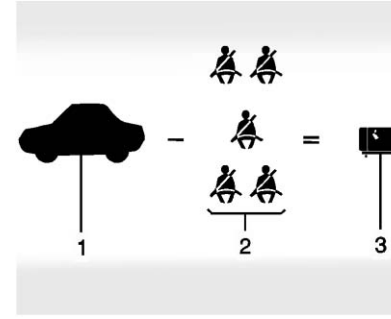

Example 2

1. Vehicle Capacity Weight for Example 2 = 453 kg (1,000 lbs).
2. Subtract Occupant Weight @ 68 kg (150 lbs) × 5 = 340 kg (750 lbs).
3. Available Cargo Weight = 113 kg (250 lbs).

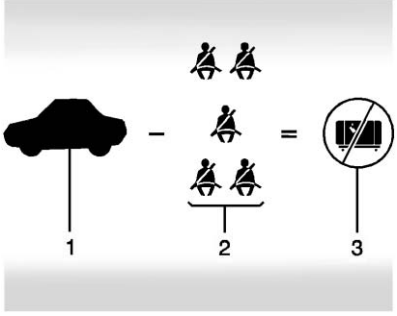

Example 3

1. Vehicle Capacity Weight for Example 3 = 453 kg (1,000 lbs).
2. Subtract Occupant Weight @ 91 kg (200 lbs) × 5 = 453 kg (1,000 lbs).
3. Available Cargo Weight = 0 kg (0 lbs).

Refer to the vehicle's tire and loading information label for specific information about the vehicle's capacity weight and seating positions. The combined weight of the driver, passengers, and cargo should never exceed the vehicle's capacity weight.

Certification/Tire Label

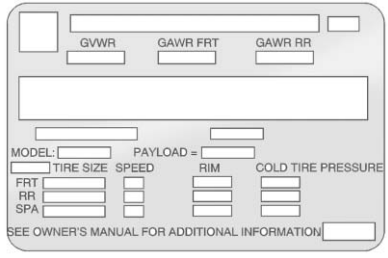

Label Example

A vehicle-specific Certification/Tire label is attached to the center pillar (B-pillar).

The label may show the size of the vehicle's original tires and the inflation pressures needed to obtain the gross weight capacity of the vehicle. The label shows the gross weight capacity of the vehicle. This is called the Gross Vehicle Weight Rating (GVWR). The GVWR includes the weight of the vehicle, all occupants, fuel, and cargo.

The Certification/Tire label may also show the maximum weights for the front and rear axles, called the Gross Axle Weight Rating (GAWR). To find out the actual loads on the front and rear axles, weigh the vehicle at a weigh station. Your dealer can help with this. Be sure to spread the load equally on both sides of the centerline.

Caution
Overloading the vehicle may cause damage. Repairs would not be covered by the vehicle warranty. Do not overload the vehicle.

⚠ Warning

Things inside the vehicle can strike and injure people in a sudden stop or turn, or in a crash.

- Put things in the cargo area of the vehicle. In the cargo area, put them as far forward as possible. Try to spread the weight evenly.
- Never stack heavier things, like suitcases, inside the vehicle so that some of them are above the tops of the seats.

(Continued)

Warning (Continued)

- Do not leave an unsecured child restraint in the vehicle.
- Secure loose items in the vehicle.
- Do not leave a seat folded down unless needed.

Starting and Operating

New Vehicle Break-In

Caution

The vehicle does not need an elaborate break-in. But it will perform better in the long run if you follow these guidelines:

- Do not drive at any one constant speed, fast or slow, for the first 800 km (500 mi). Do not make full-throttle starts. Avoid downshifting to brake or slow the vehicle.
- Avoid making hard stops for the first 300 km (200 mi) or so. During this time the new brake linings are not yet broken in. Hard stops with new linings can mean premature wear and earlier replacement. Follow this

(Continued)

Caution (Continued)

breaking-in guideline every time you get new brake linings.

Following break-in, engine speed and load can be gradually increased.

Ignition Positions

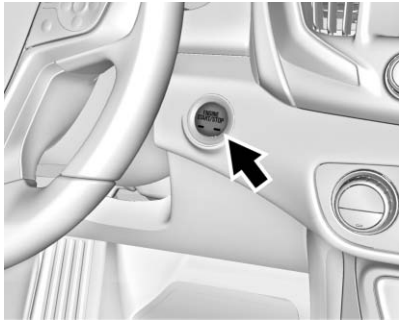

The vehicle has an electronic keyless ignition with pushbutton start.

The Remote Keyless Entry (RKE) transmitter must be in the vehicle for the system to operate. If the pushbutton start is not working, the vehicle may be near a strong radio antenna signal causing interference to the Keyless Access system. See *Remote Keyless Entry (RKE) System Operation* ⇨ *29*.

To shift out of P (Park), vehicles with a gasoline engine must be turned on, and the brake pedal must be applied. For vehicles with a diesel engine, the vehicle does not need to be on to shift out of P (Park). See *Shifting out of Park* ⇨ *193*.

Stopping the Engine/Off (No Indicator Lights) : When the vehicle is stopped, press ENGINE START/STOP once to turn the engine off.

If the vehicle is in P (Park), the ignition will turn off, and Retained Accessory Power (RAP) will remain active. See *Retained Accessory Power (RAP)* ⇨ *192*.

If the vehicle is not in P (Park), the ignition will return to ACC/ACCESSORY and display the message SHIFT TO PARK in the Driver Information Center (DIC). When the vehicle is shifted into P (Park), the ignition system will turn off.

The vehicle may have an electric steering column lock. The lock is activated when the vehicle is turned off and either front door is opened. A sound may be heard as the lock actuates or releases. The steering column lock may not release with the wheels turned off center. If this happens, the vehicle may not start. Move the steering wheel from left to right while attempting to start the vehicle. If this does not work, the vehicle needs service.

Do not turn the engine off when the vehicle is moving. This will cause a loss of power assist in the brake and steering systems and disable the airbags.

If the vehicle must be turned off in an emergency:

1. Brake using a firm and steady pressure. Do not pump the brakes repeatedly. This may deplete power assist, requiring increased brake pedal force.
2. Shift the vehicle to N (Neutral). This can be done while the vehicle is moving. After shifting to N (Neutral), firmly apply the brakes and steer the vehicle to a safe location.
3. Come to a complete stop, shift to P (Park), and turn the ignition off. The vehicle must be in P (Park) to turn the ignition off.
4. Set the electric parking brake. See *Electric Parking Brake* ⇨ *210*.

⚠ Warning

Turning off the vehicle while moving may cause loss of power assist in the brake and steering systems and disable the airbags. While driving, only shut the vehicle off in an emergency.

If the vehicle cannot be pulled over and must be shut off while driving, press and hold ENGINE START/STOP for longer than two seconds, or press twice in five seconds.

ACC/ACCESSORY (Amber Indicator Light) : This mode allows you to use some electrical accessories when the engine is off.

With the ignition off, pressing the button one time without the brake pedal applied will place the ignition system in ACC/ACCESSORY.

The ignition will switch from ACC/ACCESSORY to OFF after five minutes to prevent battery rundown.

ON/RUN/START (Green Indicator Light) : This mode is for starting and driving. With the ignition off and the brake pedal applied, pressing the button once will turn the ignition on. Once engine cranking begins, release the button. Engine cranking will continue until the engine starts. See *Starting the Engine* ⇨ *188*. The ignition will then remain in on.

Service Mode

This power mode is available for service and diagnostics, and to verify the proper operation of the malfunction indicator lamp as may be required for emission inspection purposes. With the vehicle off and the brake pedal not applied, pressing and holding ENGINE START/STOP for more than five seconds will place the vehicle in Service Mode. The instruments and audio systems will operate as they do in ON/RUN, but the vehicle will not be able to be driven. The engine will not start in Service Mode. Press ENGINE START/STOP again to turn the vehicle off.

Starting the Engine

Shift the vehicle into P (Park) or N (Neutral). To restart the engine when the vehicle is already moving, use N (Neutral) only.

Caution

Do not try to shift to P (Park) if the vehicle is moving. If you do, you could damage the transmission. Shift to P (Park) only when the vehicle is stopped.

Caution

If you add electrical parts or accessories, you could change the way the engine operates. Any resulting damage would not be covered by the vehicle warranty. See *Add-On Electrical Equipment* ⇨ *257*.

Gasoline Engine Starting Procedure

1. With the Keyless Access system, the Remote Keyless Entry (RKE) transmitter must be in the vehicle. Press ENGINE START/STOP with the brake pedal applied. When the engine begins cranking, let go of the button.

   The idle speed will go down as the engine gets warm. Do not race the engine immediately after starting it.

   If the RKE transmitter is not in the vehicle, if there is interference, or if the RKE battery is low, a Driver Information Center (DIC) will display a message. See *Remote Keyless Entry (RKE) System Operation* ⇨ *29*.

Caution

Cranking the engine for long periods of time, by trying to start the engine immediately after cranking has ended, can overheat and damage the cranking motor, and drain the battery. Wait at least 15 seconds between each try, to let the cranking motor cool down.

2. If the engine does not start after five to 10 seconds, especially in very cold weather (below −18 °C or 0 °F), it could be flooded with too much gasoline. Try pushing the accelerator pedal all the way to the floor and holding it there as you press ENGINE START/STOP. Wait at least 15 seconds between each try, to allow the cranking motor to cool down. When the engine starts, release the accelerator. If the vehicle starts briefly but then stops again, do the same thing.

This clears the extra gasoline from the engine. Do not race the engine immediately after starting it. Operate the engine and transmission gently until the oil warms up and lubricates all moving parts.

Diesel Engine Starting Procedure

The diesel engine starts differently than a gasoline engine.

1. With the Keyless Access system, the RKE transmitter must be in the vehicle. Press ENGINE START/STOP and observe the wait-to-start light. See *Wait-to-Start Light* ⇨ *133*. This light may not come on if the engine is warm.
2. As soon as the wait-to-start light goes off, immediately press ENGINE START/STOP with the brake pedal applied to start.

   The engine has a fast warm-up glow plug system. The wait-to-start light will illuminate for a much shorter time than most diesel engines, due to the rapid heating of the glow plug system.

Caution

If the wait-to-start light stays on after starting the vehicle, the vehicle may not run properly. Have the vehicle serviced right away.

3. If the engine does not start after 15 seconds of cranking, wait one minute for the cranking motor to cool, then try the same steps again.

If you are trying to start the engine after the vehicle has run out of fuel, follow the steps in *Running Out of Fuel (Diesel)* ⇨ *246*.

When the engine is cold, let it run for a few minutes before driving. This lets oil pressure build up. The engine will sound louder when it is cold.

Cold Weather Starting (Diesel Engine)

Use the recommended engine oil when the outside temperature drops below freezing. See *Engine Oil* ⇨ *269*. When the outside temperature drops below –18°C (0°F), use of the engine heater is recommended.

See *Fuel for Diesel Engines* ⇨ *238* for information on what fuel to use in cold weather.

If the Diesel Engine Will Not Start

If the vehicle has run out of fuel, see *Running Out of Fuel (Diesel)* ⇨ *246*.

If the vehicle is not out of fuel, and the engine will not start:

Press ENGINE START/STOP. Immediately after the wait-to-start light goes off, press ENGINE START/STOP to start the vehicle.

If the light does not go off, wait a few seconds, then try starting the engine again. See your dealer for a starting system check.

If the light comes on and then goes off, and it is known that the battery is charged, but the engine still will not start, the vehicle needs service.

If the light does not come on when the engine is cold, the vehicle needs service.

If the battery does not have enough charge to start the engine, see *Battery - North America* ⇨ *284*.

Check that the correct engine oil has been used and changed at appropriate intervals. If the wrong oil is used, the engine may be harder to start.

Be sure to use the proper fuel for existing weather conditions. See *Fuel for Diesel Engines* ⇨ *238*.

If the engine starts, runs a short time, then stops, the vehicle needs service.

⚠ Warning

Do not use gasoline or starting aids, such as ether, in the air intake. They could damage the engine, which may not be covered by the vehicle warranty. They could also cause a fire, which could cause serious personal injury.

Stop/Start System

⚠ Warning

Exiting the vehicle without first shifting into P (Park) may cause the vehicle to move. You or others may be injured. Because the vehicle may have an auto engine Stop/Start feature, the vehicle's engine might seem to be shut off; however, once the brake pedal is released, the engine will start up again. The engine may restart even while the brake is applied.

(Continued)

Warning (Continued)

Shift to P (Park) and turn the ignition off before exiting the vehicle.

The vehicle has a fuel saving stop/start system to shut off the engine and help conserve fuel.

Auto Engine Stop/Start

When the brakes are applied and the vehicle is at a complete stop, the engine may turn off. When the engine turns off, the tachometer displays AUTO STOP. See *Tachometer* ⇨ *123*. When the brake pedal is released or the accelerator pedal is pressed, the engine will restart.

Auto Stop may be deactivated if:

- A minimum vehicle speed is not reached.
- The engine or transmission is not at the required operating temperature.

- The outside temperature is not in the required operating range, typically between −10 °C (14 °F) and 50 °C (122 °F).
- The vehicle is in any gear other than D (Drive).
- The battery has been recently disconnected.
- The battery charge is low.
- The interior comfort level has not reached the required level for the climate control system or defog settings. See *Dual Automatic Climate Control System* ⇨ *162*.
- The Auto Stop time is greater than two minutes.

Engine Heater

⚠ Warning

Do not plug in the engine block heater while the vehicle is parked in a garage or under a carport. Property damage or personal injury may result. Always park the vehicle in a clear open area away from buildings or structures.

The engine heater, if available, can help in cold weather conditions at or below −18 °C (0 °F) for easier starting and better fuel economy during engine warm-up. Plug in the engine heater at least four hours before starting the vehicle. An internal thermostat in the plug end of the cord will prevent engine heater operation at temperatures above −18 °C (0 °F).

To Use the Engine Heater

1. Turn off the engine.
2. Remove the heater cord from the rear compartment.
3. Check the heater cord for damage. If it is damaged, do not use it. See your dealer for a replacement. Inspect the cord for damage yearly.
4. Plug the cord into the receptacle in the front fascia.
5. Plug the other end of the cord into a normal, grounded 110-volt AC outlet.

⚠ Warning

Improper use of the heater cord or an extension cord can damage the cord and may result in overheating and fire.

- Plug the cord into a three-prong electrical utility receptacle that is protected by a ground fault detection function. An ungrounded outlet could cause an electric shock.
- Use a weatherproof, heavy-duty, 15 amp-rated extension cord if needed. Failure to use the recommended extension cord in good operating condition, or using a damaged heater or extension cord, could make it overheat and cause a fire, property damage, electric shock, and injury.

(Continued)

Warning (Continued)

- Do not operate the vehicle with the heater cord permanently attached to the vehicle. Possible heater cord and thermostat damage could occur.
- While in use, do not let the heater cord touch vehicle parts or sharp edges. Never close the hood on the heater cord.
- Before starting the vehicle, unplug the cord, reattach the cover to the plug, and securely fasten the cord. Keep the cord away from any moving parts.

The length of time the heater should remain plugged in depends on several factors. Ask a dealer in the area where you will be parking the vehicle for the best advice on this.

Retained Accessory Power (RAP)

Some vehicle accessories may be used after the ignition is turned off.

The power windows and sunroof, if equipped, will continue to work for up to 10 minutes or until any door is opened.

The infotainment system will continue to work for 10 minutes, until the driver door is opened, or until the ignition is turned on or placed in ACC/ACCESSORY.

Shifting Into Park

⚠ Warning

It can be dangerous to get out of the vehicle if the vehicle is not in P (Park) with the parking brake set. The vehicle can roll. If you have left the engine running, the vehicle can move suddenly. You or others could be injured. To be sure the vehicle will not move,

(Continued)

Warning (Continued)

even when you are on fairly level ground, use the steps that follow. If you are pulling a trailer, see *Driving Characteristics and Towing Tips* ⇨ *251*.

To shift into P (Park):

1. Hold the brake pedal down and set the parking brake.

   See *Electric Parking Brake* ⇨ *210* for more information.

2. Press P (Park).
3. Turn the ignition off.

Leaving the Vehicle With the Engine Running

⚠ Warning

It can be dangerous to leave the vehicle with the engine running. It could overheat and catch fire.

(Continued)

Warning (Continued)

It is dangerous to get out of the vehicle if the vehicle is not in P (Park) with the parking brake set. The vehicle can roll.

Do not leave the vehicle when the engine is running. If you have left the engine running, the vehicle can move suddenly. You or others could be injured. To be sure the vehicle will not move, even when you are on fairly level ground, always set the parking brake and shift the vehicle to P (Park). See *Shifting Into Park* ⇨ *192*. If you are towing a trailer, see *Driving Characteristics and Towing Tips* ⇨ *251*.

If you have to leave the vehicle with the engine running, the vehicle must be in P (Park) with the parking brake set.

Confirm that the vehicle is in P (Park).

Torque Lock

Torque lock is when the weight of the vehicle puts too much force on the parking pawl in the transmission. This happens when parking on a hill and shifting the transmission into P (Park) is not done properly and then it is difficult to shift out of P (Park). To prevent torque lock, set the parking brake and then shift into P (Park). To find out how, see “Shifting Into Park” listed previously.

On certain steep grades, the transmission will automatically set the parking brake to prevent torque lock.

If torque lock does occur, the vehicle may need to be pushed uphill by another vehicle to relieve the parking pawl pressure, so you can shift out of P (Park).

Shifting out of Park

This vehicle is equipped with an electronic transmission. If the vehicle has an uncharged battery or a battery with low voltage, try

charging or jump starting the battery. See *Jump Starting - North America* ⇨ *335*.

To shift out of P (Park):

1. Apply the brake pedal.
2. Press ENGINE START/STOP.
3. Press/Pull the desired shift switch on the front shift console.
4. The P indicator will turn white and the gear indicator will turn red when the vehicle is no longer in P (Park).

If the vehicle cannot shift out of P (Park), a Driver Information Center (DIC) message will be displayed. See your dealer for service.

Diesel Engine Only

Vehicles with a Diesel do not have manual park release and the ignition does not need to be on to shift out of P (Park). To shift from P (Park) to N (Neutral) with the engine not running, the driver must apply the brake pedal and press the N (Neutral) button until N is displayed on the console and the cluster.

Manual Park Release (Gasoline Engine Only)

Vehicles with a gasoline engine may include a manual park release that can be used to shift the vehicle into N (Neutral) when the engine is not running.

⚠ Warning

The transmission will be placed in N (Neutral) when the manual park release is pulled. The vehicle can roll and you or others could be injured. Ensure the vehicle is on level ground.

Caution

The manual park release is not intended to be used for towing. Damage may result from using

(Continued)

Caution (Continued)

the manual park release in this way. The repairs would not be covered by the vehicle warranty.

Pulling the manual park release while the vehicle is on or turning the ignition on while the manual park release is pulled, will result in a Service Transmission message being displayed.

To place the vehicle in N (Neutral) using the manual park release:

1. Ensure the vehicle is on level ground and set the parking brake. Release the brake pedal.
2. Turn the vehicle off.

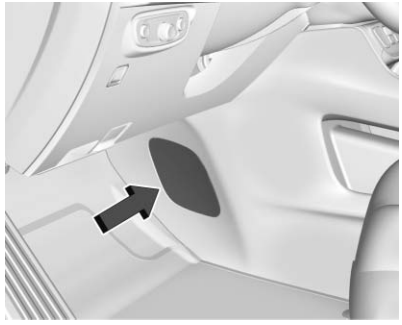

3. Use a flat-bladed tool to remove the interior trim panel on the center console to the right of the accelerator pedal.
4. Ensure more than one minute has elapsed since Step 2. Apply the brake pedal.

5. Pull the manual park release lever 90° to its latching position.
6. Release the brake pedal, place the ignition in ACC/ACCESSORY and release the parking brake.

To return the vehicle to P (Park) using the manual park release:

1. Bring the vehicle to a complete stop.

2. Rotate the manual park release 90° back to its original position.
3. Apply the parking brake.
4. Confirm that the vehicle is in P (Park) by turning the ignition on or placing the ignition in ACC/ACCESSORY, then ensure that the indicator displays P.

Parking over Things That Burn

⚠ Warning

Things that can burn could touch hot exhaust parts under the vehicle and ignite. Do not park over papers, leaves, dry grass, or other things that can burn.

Extended Parking

It is best not to park with the vehicle running. If the vehicle is left running, be sure it will not move and there is adequate ventilation.

See *Shifting Into Park* ⇨ *192* and *Engine Exhaust* ⇨ *196*.

If the vehicle is left parked and running with the RKE transmitter outside the vehicle, it will turn off after one hour.

If the vehicle is left parked and running with the RKE transmitter inside the vehicle, it will turn off after two hours.

The vehicle could turn off sooner if it is parked on a hill, due to lack of available fuel.

The timer will reset if the vehicle is taken out of P (Park) while it is running.

Engine Exhaust

⚠ Warning

Engine exhaust contains carbon monoxide (CO), which cannot be seen or smelled. Exposure to CO can cause unconsciousness and even death.

Exhaust may enter the vehicle if:

- The vehicle idles in areas with poor ventilation (parking garages, tunnels, deep snow that may block underbody airflow or tail pipes).
- The exhaust smells or sounds strange or different.
- The exhaust system leaks due to corrosion or damage.
- The vehicle exhaust system has been modified, damaged, or improperly repaired.

(Continued)

Warning (Continued)

- There are holes or openings in the vehicle body from damage or aftermarket modifications that are not completely sealed.

If unusual fumes are detected or if it is suspected that exhaust is coming into the vehicle:

- Drive it only with the windows completely down.
- Have the vehicle repaired immediately.

Never park the vehicle with the engine running in an enclosed area such as a garage or a building that has no fresh air ventilation.

Running the Vehicle While Parked

It is better not to park with the engine running.

If the vehicle is left with the engine running, follow the proper steps to be sure the vehicle will not move. See *Shifting Into Park* ⇨ *192* and *Engine Exhaust* ⇨ *196*.

If parking on a hill and pulling a trailer, see *Driving Characteristics and Towing Tips* ⇨ *251*.

Diesel Particulate Filter

The Diesel Particulate Filter (DPF) system filters soot particles out of the exhaust gases. The DPF is under the vehicle in the exhaust system.

Depending on a number of factors monitored by the engine computer, the DPF will need to be cleaned of accumulated solids. When a cleaning is needed, the engine computer will initiate a self-cleaning function that runs automatically during driving without any notification. The filter is cleaned by periodically burning off the soot particles at high temperature. This process takes place automatically under set driving conditions and may take up to 25 minutes. Fuel consumption may be higher during this period.

While the DPF cleaning is automatically controlled by the engine computer, the vehicle will need to operate continuously for approximately 25 minutes and at

speeds greater than 50 km/h (30 mph) to clean the DPF effectively.

If the vehicle is used for numerous short trips or extended slow-speed operation, the engine computer may not be able to adequately heat up the exhaust system to clean the DPF effectively. The engine computer has been designed to continuously monitor the condition of the DPF. When the engine computer detects that the DPF is nearly full of particulates and that the vehicle is not being operated in a manner that would allow effective automatic DPF cleaning, a Driver Information Center (DIC) message will display. Start the cleaning process as soon as possible.

Cleaning Process

To activate the cleaning process, continue driving safely, and keep vehicle speed above 50 km/h (30 mph) until the warning message in the DIC turns off.

If the vehicle continues to be driven with the DPF warning message on, and the exhaust filter is not cleaned as required, the malfunction indicator lamp and the ENGINE POWER IS REDUCED message will come on. Dealer service is necessary.

See *Malfunction Indicator Lamp (Check Engine Light)* ⇨ *127*.

⚠ Warning

During DPF self cleaning or during extended idling while parked, the exhaust system and exhaust gases are very hot. Things that burn could touch hot exhaust parts under the vehicle and ignite. You or others could be burned. Do not park, or idle for an extended period of time, near or over papers, leaves, dry grass, or other things that can burn. Keep the exhaust area clear of material that could ignite or burn. See *Parking over Things That Burn* ⇨ *196* for more information.

Diesel Exhaust Fluid

⚠ Warning

Diesel Exhaust Fluid (DEF) is corrosive. Do not allow it to come in contact with your skin, eyes, or the finished surfaces of the vehicle. If exposed, it may cause skin and eye irritation. Wear skin and eye protection when handling. Inhalation may cause irritation to the upper respiratory tract. Store in a cool, well-ventilated area. For more safety and storage information, see the label of the Diesel Exhaust Fluid container.

DEF is used with diesel engines to reduce the amount of regulated emissions produced. The fluid level in the DEF tank must be maintained for the vehicle to run correctly. The capacity of the DEF tank is 18.5 L (4.9 gal).

It is normal to hear the DEF system purge fluid back into the tank after the vehicle is shut off.

Locating Diesel Exhaust Fluid

DEF can be purchased at a GMC dealer. It can also be purchased at authorized vehicle dealerships. Additionally, some diesel fueling stations or retailers may have DEF for purchase. For vehicles with an active OnStar service plan, OnStar can help locate a DEF retailer. See *Customer Assistance Offices* ⇨ *371* for phone numbers to assist in contacting a GM dealer. See *Recommended Fluids and Lubricants* ⇨ *361*.

Filling the DEF Tank

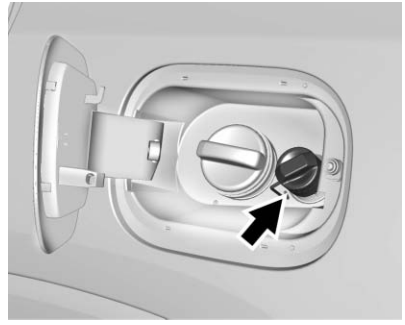

Caution

Use only DEF that is GM approved, or fluid containing the API certified or ISO 22241 label. The use of other fluids could damage the system, requiring costly repairs that will not be covered by the vehicle warranty.

When adding DEF to an empty or very low tank, always add at least 7.6 L (2 gal) of fluid to release the vehicle from speed limitation.

To prevent damage to the system, do not overfill the DEF tank. When fluid reaches the top of the fill pipe, stop filling. Do not top off the DEF tank.

If you spill DEF during filling, wipe any affected surface with a damp cloth.

For information on how to fill the DEF tank, see *Filling the Tank (Gasoline)* ⇨ *247* or *Filling the Tank (Diesel)* ⇨ *248*.

Exhaust Fluid Low

A full DEF tank will last for several thousand kilometers (miles), depending on vehicle usage. As the exhaust fluid level drops, warnings will automatically be displayed in the Driver Information Center (DIC). Exhaust fluid level status is available on the DIC under the Vehicle Information menu. See “Diesel Exhaust Fluid (DEF)” in *Driver Information Center (DIC)* ⇨ *136*.

To avoid vehicle speed limitations, the DEF tank should be refilled at the first opportunity after a low

warning indication. If DEF is added before the EXHAUST FLUID EMPTY REFILL NOW message appears, it may take several km/mi for the DIC message to update.

If the vehicle speed has been limited and DEF has been added, it may take up to 30 seconds after engine start with the vehicle stopped for the EXHAUST FLUID EMPTY REFILL NOW message to clear. If the vehicle is driven prior to the DIC message clearing, the vehicle speed will still be limited. If the DIC message clears while driving, the speed limitation will be removed gradually.

If DEF is added under freezing conditions, additional time may be required to remove speed limitations and may require less fluid to fill the DEF tank.

The following actions describe strategies required by the U.S. Environmental Protection Agency (EPA) and the California Air Resource Board (CARB). The DEF messages relate to these strategies.

The DIC message EXHAUST FLUID RANGE: XXXX km (mi) displays at approximately 1 600 km (1,000 mi) of fluid range remaining. This message appears again at approximately 500 km (300 mi) of remaining range before the exhaust fluid tank becomes empty.

Below 500 km (300 mi) of range remaining, these messages will appear every time the vehicle is started.

Below 121 km (75 mi) of range remaining, the DIC message EXHAUST FLUID LOW SPEED LIMITED SOON displays. This message will display every time the vehicle is started.

If these warnings are ignored and the DEF tank becomes empty, the DIC message EXHAUST FLUID EMPTY REFILL NOW - 563 KM (350 MI) UNTIL 104 KM/H (65 MPH) MAX SPEED displays. The displayed mileage will decrease as driving continues. A warning light also comes on.

When the mileage countdown is zero, the DIC message EXHAUST FLUID EMPTY REFILL NOW - TRANSITIONING TO 104 KM/H (65 MPH) MAX SPEED displays. A warning light and a chime also come on. Vehicle speed will be reduced to a maximum speed limit of 104 km/h (65 mph).

After the transition to 104 km/h (65 mph) is complete, the DIC message EXHAUST FLUID EMPTY REFILL NOW - SPEED LIMITED TO 104 KM/H (65 MPH) – 120 KM (75 MI) UNTIL 88 KM/H (55 MPH) MAX SPEED displays. The displayed mileage will decrease as driving continues. A warning light and a chime also come on.

When the mileage countdown is zero, the DIC message EXHAUST FLUID EMPTY REFILL NOW - TRANSITIONING TO 88 KM/H (55 MPH) MAX SPEED displays. A flashing warning light and a chime also come on. Vehicle speed will be reduced to a maximum speed limit of 88 km/h (55 mph).

After the transition to 88 km/h (55 mph) is complete, the DIC message EXHAUST FLUID EMPTY REFILL NOW - SPEED LIMITED TO 88 KM/H (55 MPH) – 120 KM (75 MI) UNTIL 8 KM/H (5 MPH) MAX SPEED displays. The displayed mileage will decrease as driving continues. A flashing warning light and a chime also come on.

When the mileage countdown is zero, the DIC message EXHAUST FLUID EMPTY REFILL NOW - TRANSITIONING TO 8 KM/H (5 MPH) MAX SPEED displays. A flashing warning light and a chime also come on. Vehicle speed will be reduced to a maximum speed limit of 8 km/h (5 mph).

After the transition to 8 km/h (5 mph) is complete, the DIC message EXHAUST FLUID EMPTY REFILL NOW - SPEED LIMITED TO 8 KM/H (5 MPH) displays. A flashing warning light and a chime also come on.

Add at least 7.6 L (2 gal) of fluid to release the vehicle from speed limitation from a very low or empty tank. The capacity of the DEF tank is 18.5 L (4.9 gal).

See *Diesel Exhaust Fluid (DEF) Warning Light* ⇨ *134* and *Recommended Fluids and Lubricants* ⇨ *361*.

Exhaust Fluid Quality Poor

Use only exhaust fluid that is GM approved, or fluid containing the API certified or ISO 22241 label.

All DEF has an expiration date. If the system detects poor quality, or contaminated or diluted DEF, the DIC message EXHAUST FLUID QUALITY POOR - SEE OWNERS MANUAL NOW – 160 KM (99 MI) UNTIL 104 KM/H (65 MPH) MAX SPEED displays. The displayed mileage will decrease as driving continues. A warning light also comes on. Adding fresh DEF to the system may resolve the problem, depending on several factors. If the DIC message persists, see your dealer or additional DIC messages may display.

When the mileage countdown is zero, a DIC message EXHAUST FLUID QUALITY POOR - SEE OWNERS MANUAL NOW - TRANSITIONING TO 104 KM/H (65 MPH) MAX SPEED displays. A warning light and a chime also come on. Vehicle speed will be reduced to a maximum speed limit of 104 km/h (65 mph).

After the transition to 104 km/h (65 mph) is complete, the DIC message EXHAUST FLUID QUALITY POOR - SEE OWNERS MANUAL NOW - SPEED LIMITED TO 104 KM/H (65 MPH) – 120 KM (75 MI) UNTIL 88 KM/H (55 MPH) MAX SPEED displays. The displayed mileage will decrease as driving continues. A warning light and a chime also come on.

When the mileage countdown is zero, the DIC message EXHAUST FLUID QUALITY POOR - SEE OWNERS MANUAL NOW - TRANSITIONING TO 88 KM/H

(55 MPH) MAX SPEED displays. A flashing warning light and a chime also come on. Vehicle speed will be reduced to a maximum speed limit of 88 km/h (55 mph).

After the transition to 88 km/h (55 mph) is complete, a DIC message EXHAUST FLUID QUALITY POOR - SEE OWNERS MANUAL NOW - SPEED LIMITED TO 88 KM/H (55 MPH) – 120 KM (75 MI) UNTIL 8 KM/H (5 MPH) MAX SPEED displays. The displayed mileage will decrease as driving continues. A flashing warning light and a chime also come on.

When the mileage countdown is zero, a DIC message EXHAUST FLUID QUALITY POOR - SEE OWNERS MANUAL NOW - TRANSITIONING TO 8 KM/H (5 MPH) MAX SPEED displays. A flashing warning light and a chime also come on. Vehicle speed will be reduced to a maximum speed limit of 8 km/h (5 mph).

After the transition to 8 km/h (5 mph) is complete, a DIC message EXHAUST FLUID QUALITY POOR - SEE OWNERS MANUAL NOW - SPEED LIMITED TO 8 KM/H (5 MPH) displays. A flashing warning light and a chime also come on.

Service Exhaust Fluid System

If a problem occurs with the DEF system, the DIC message SERVICE EXHAUST FLUID SYSTEM - SEE OWNERS MANUAL NOW – 160 KM (99 MI) UNTIL 104 KM/H (65 MPH) MAX SPEED displays. The displayed mileage will decrease as driving continues. A warning light also comes on. In some cases this message will clear itself, indicating that the DEF system was able to correct the condition. If the DIC message persists, see your dealer or additional DIC messages may display.

When the mileage countdown is zero, the DIC message SERVICE EXHAUST FLUID SYSTEM - SEE OWNERS MANUAL NOW - TRANSITIONING TO 104 KM/H (65 MPH) MAX SPEED displays. A warning light and a chime also come on. Vehicle speed will be reduced to a maximum speed limit of 104 km/h (65 mph).

After the transition to 104 km/h (65 mph) is complete, a DIC message SERVICE EXHAUST FLUID SYSTEM - SEE OWNERS MANUAL NOW - SPEED LIMITED TO 104 KM/H (65 MPH) – 120 KM (75 MI) UNTIL 88 KM/H (55 MPH) MAX SPEED displays. The displayed mileage will decrease as driving continues. A warning light and a chime also come on.

When the mileage countdown is zero, the DIC message SERVICE EXHAUST FLUID SYSTEM - SEE OWNERS MANUAL NOW - TRANSITIONING TO 88 KM/H (55 MPH) MAX SPEED displays. A flashing warning light and a chime also come on. Vehicle speed will be reduced to a maximum speed limit of 88 km/h (55 mph).

After the transition to 88 km/h (55 mph) is complete, the DIC message SERVICE EXHAUST FLUID SYSTEM - SEE OWNERS MANUAL NOW - SPEED LIMITED

TO 88 KM/H (55 MPH) – 120 KM (75 MI) UNTIL 8 KM/H (5 MPH) MAX SPEED displays. The displayed mileage will decrease as driving continues. A flashing warning light and a chime also come on.

When the mileage countdown is zero, the DIC message SERVICE EXHAUST FLUID SYSTEM - SEE OWNERS MANUAL NOW - TRANSITIONING TO 8 KM/H (5 MPH) MAX SPEED displays. A flashing warning light and a chime also come on. Vehicle speed will be reduced to a maximum speed limit of 8 km/h (5 mph).

After the transition to 8 km/h (5 mph) is complete, the DIC message SERVICE EXHAUST FLUID SYSTEM - SEE OWNERS MANUAL NOW - SPEED LIMITED TO 8 KM/H (5 MPH) displays. A flashing warning light and a chime also come on.

Service Emission System

If a problem occurs with the vehicle emission system, the DIC message SERVICE EMISSION SYSTEM - SEE OWNERS MANUAL NOW – 282 KM (175 MI) UNTIL 104 KM/H (65 MPH) MAX SPEED displays. The displayed mileage will decrease as driving continues. In some cases this message will clear itself, indicating that the emission system was able to correct the condition. If the DIC message persists, see your dealer or additional DIC messages may display.

When the mileage countdown is zero, the DIC message SERVICE EMISSION SYSTEM - SEE OWNERS MANUAL NOW - TRANSITIONING TO 104 KM/H (65 MPH) MAX SPEED displays. A chime also comes on. Vehicle speed will be reduced to a maximum speed limit of 104 km/h (65 mph).

After the transition to 104 km/h (65 mph) is complete, the DIC message SERVICE EMISSION SYSTEM - SEE OWNERS MANUAL NOW - SPEED LIMITED TO 104 KM/H (65 MPH) – 120 KM (75 MI) UNTIL 88 KM/H (55 MPH) MAX SPEED displays. The displayed mileage will decrease as driving continues. A chime also comes on.

When the mileage countdown is zero, the DIC message SERVICE EMISSION SYSTEM - SEE OWNERS MANUAL NOW - TRANSITIONING TO 88 KM/H (55 MPH) MAX SPEED displays. A chime also comes on. Vehicle speed will be reduced to a maximum speed limit of 88 km/h (55 mph).

After the transition to 88 km/h (55 mph) is complete, the DIC message SERVICE EMISSION SYSTEM - SEE OWNERS MANUAL NOW - SPEED LIMITED TO 88 KM/H (55 MPH) displays. A chime also comes on.

Automatic Transmission

The shift switches are on the front shift console. The selected gear position will illuminate red on the shift switch, while all others will be displayed in white. If the shift is not immediate, as in very cold conditions, the indicator on the shift switch may blink until it is fully engaged.

The transmission does not operate when the vehicle is off.

If the vehicle is in ACC/ACCESSORY, the transmission can be shifted into P (Park).

If ENGINE START/STOP is pressed twice while at a relatively high speed, the engine will turn off and the transmission will automatically shift to N (Neutral). Once the vehicle is stopped, P (Park) can be selected.

P : This position locks the drive wheels. Use P (Park) when starting the vehicle to ensure the vehicle does not move.

⚠ Warning

It is dangerous to get out of the vehicle if the transmission is not in P (Park) with the parking brake set. The vehicle can roll.

Do not leave the vehicle when the engine is running. If the engine has been left running, the vehicle can move suddenly. You or others could be injured. To be sure the

(Continued)

Warning (Continued)

vehicle will not move, even when on fairly level ground, always set the parking brake and place the transmission into P (Park).
See *Shifting Into Park* ⇨ *192* and *Driving Characteristics and Towing Tips* ⇨ *251*.

This vehicle is equipped with an electronic transmission. The R (Reverse) and D (Drive) shift switches are designed to prevent inadvertent shifting out of P (Park) unless the ignition is on, and the brake pedal is applied.

For vehicles with a diesel engine, the vehicle does not need to be on to shift out of P (Park).

When the vehicle is stopped, press ENGINE START/STOP to turn off the vehicle. The transmission will shift to P (Park) automatically.

The vehicle will not shift into P (Park) if it is moving too fast. Stop the vehicle and shift into P (Park).

To shift in and out of P (Park), see *Shifting Into Park* ⇨ *192* and *Shifting out of Park* ⇨ *193*.

R : Use this gear to back up.

If the vehicle is shifted from either R (Reverse) to D (Drive), or D (Drive) to R (Reverse) while the speed is too high, the vehicle will shift to N (Neutral). Reduce the vehicle speed and try the shift again.

To shift into R (Reverse):

1. Bring the vehicle to a complete stop.
2. Pull the R (Reverse) switch on the front shift console.

To shift out of R (Reverse):

1. Bring the vehicle to a complete stop.
2. Shift to the desired gear.

At low vehicle speeds, R (Reverse) can be used to rock the vehicle back and forth to get out of snow, ice, or sand without damaging the transmission. See *If the Vehicle Is Stuck* ⇨ *180*.

N : In this position, the engine does not connect with the wheels. To restart the engine when the vehicle is already moving, use N (Neutral) only.

⚠ Warning

Shifting into a drive gear while the engine is running at high speed is dangerous. Unless your foot is firmly on the brake pedal, the vehicle could move very rapidly. You could lose control and hit people or objects. Do not shift into a drive gear while the engine is running at high speed.

Caution

Shifting out of P (Park) or N (Neutral) with the engine running at high speed may damage the transmission. The repairs would not be covered by

(Continued)

Caution (Continued)

the vehicle warranty. Be sure the engine is not running at high speed when shifting the vehicle.

Caution

The vehicle is not designed to stay in N (Neutral) for extended periods of time. It will automatically shift into P (Park).

To shift into N (Neutral), press the N (Neutral) switch on the front shift console until the N (Neutral) indicator displays.

To shift out of N (Neutral):

1. Bring the vehicle to a complete stop.
2. Shift to the desired gear.

Car Wash Mode

This vehicle includes a Car Wash Mode that allows the vehicle to remain in N (Neutral) for use in automatic car washes.

Caution
The vehicle is not designed to stay in N (Neutral) for extended periods of time. It will automatically shift into P (Park) if left in Car Wash Mode.

Car Wash Mode (Engine Off – Driver in Vehicle) – Gasoline Engine Only

To place the vehicle in N (Neutral) with the engine off and the vehicle occupied:

1. Drive to the entrance of the car wash.
2. Apply the brake pedal.
3. Shift to N (Neutral).
4. Turn off the engine and release the brake pedal.
5. The indicator should continue to show N. If it does not, repeat Steps 2–4.
6. The vehicle is now ready for the car wash.

Car Wash Mode (Engine Off – Driver out of Vehicle) – Gasoline Engine Only

To place the vehicle in N (Neutral) with the engine off and the vehicle unoccupied:

1. Drive to the entrance of the car wash.
2. Apply the brake pedal.
3. Open the door.
4. Shift to N (Neutral).
5. Turn off the engine and release the brake pedal.
6. The indicator should continue to show N. If it does not, repeat Steps 2–5.
7. Exit the vehicle and close the door. The vehicle is now ready for the car wash.
8. Ensure the vehicle is in P (Park) upon returning to the vehicle.

Car Wash Mode (Engine Off – Driver in Vehicle) – Diesel Engine Only

To place the vehicle in N (Neutral) with the engine off and the vehicle occupied:

1. Drive to the entrance of the car wash.
2. Shift to P (Park) and turn off the vehicle.
3. Place the ignition in Service Mode. See *Ignition Positions* ⇨ *186*.
4. Apply the brake pedal and shift to N (Neutral).
5. Release the brake pedal. The indicator should continue to show N. If it does not, repeat Steps 2–4.
6. The vehicle is now ready for the car wash.

Car Wash Mode (Engine Off – Driver out of Vehicle) – Diesel Engine Only

To place the vehicle in N (Neutral) with the engine off and the vehicle unoccupied:

1. Drive to the entrance of the car wash.
2. Shift to P (Park) and turn off the vehicle.
3. Place the ignition in Service Mode. See *Ignition Positions* ⇨ *186*.
4. Open the door.
5. Apply the brake pedal and shift to N (Neutral).
6. Release the brake pedal. The indicator should continue to show N. If it does not, repeat steps 2–5.
7. Exit the vehicle and close the door. The vehicle is now ready for the car wash.
8. Ensure the vehicle is in P (Park) upon returning to the vehicle.

Car Wash Mode (Engine On – Driver in Vehicle) – Gasoline and Diesel Engines

To place the vehicle in N (Neutral) with the engine on and the vehicle occupied:

1. Drive to the entrance of the car wash.
2. Apply the brake pedal.
3. Shift to N (Neutral).
4. Release the brake pedal. The vehicle is now ready for the car wash.

Car Wash Mode (Engine On – Driver out of Vehicle) – Gasoline and Diesel Engines

To place the vehicle in N (Neutral) with the engine on and the vehicle unoccupied:

1. Drive to the entrance of the car wash.
2. Apply the brake pedal.
3. Open the door.
4. Shift to N (Neutral), then release the brake pedal.
5. The indicator should continue to show N. If it does not, repeat Steps 2–4.
6. Exit the vehicle and close the door. The vehicle is now ready for the car wash.
7. Ensure the vehicle is in P (Park) upon returning to the vehicle.

Caution

A transmission hot message may display if the automatic transmission fluid is too hot. Driving under this condition can damage the vehicle. Stop and idle the engine to cool the automatic transmission fluid. This message clears when the transmission fluid has cooled sufficiently.

D : This position is for normal driving. If more power is needed for passing, press the accelerator pedal down.

To shift into D (Drive):

1. Bring the vehicle to a complete stop.
2. Pull the D (Drive) switch on the front shift console.

To shift out of D (Drive):

1. Bring the vehicle to a complete stop.
2. Shift to the desired gear.

Downshifting the transmission in slippery road conditions could result in skidding. See “Skidding” under *Loss of Control* ⇨ *173*.

Caution

Spinning the tires or holding the vehicle in one place on a hill using only the accelerator pedal may damage the transmission. The repair will not be covered by the vehicle warranty. If the vehicle is stuck, do not spin the tires. When stopping on a hill, use the brakes to hold the vehicle in place.

Manual Mode

Electronic Range Select (ERS) Mode

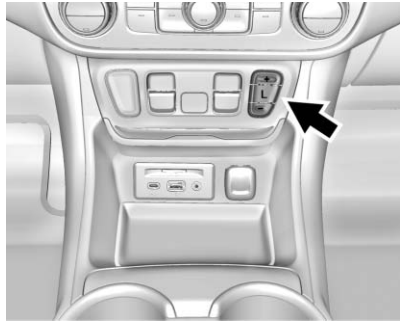

ERS or manual mode allows for the selection of the range of gear positions. Use this mode when driving downhill or towing a trailer to limit the top gear and vehicle speed. The shift position indicator within the Driver Information Center (DIC) will display a number next to the L indicating the highest available gear under manual mode and the driving conditions when manual mode was selected.

To use this feature:

1. Press the L (Low) button.
2. Press the plus/minus button on the front shift console to increase or decrease the gear range available.

When shifting to L (Low), the transmission will shift to a preset lower gear range. For this preset range, the highest gear available is displayed next to the L in the DIC. See *Driver Information Center (DIC)* ⇨ *136*. All gears below that number are available to use. For example, when 4 (Fourth) is shown next to the L, 1 (First) through 4 (Fourth) gears are shifted automatically. To shift to 5 (Fifth) gear, press the + (Plus) button or shift into D (Drive).

L (Low) will prevent shifting to a lower gear range if the engine speed is too high. If vehicle speed is not reduced within the time allowed, the lower gear range shift will not be completed. Slow the vehicle, then press the − (Minus) button to the desired lower gear range.

While using ERS, cruise control can be used.

Tow/Haul Mode

For information on the Tow/Haul Mode, see *Driver Mode Control* ⇨ *216*.

Automatic Engine Grade Braking

Automatic Engine Grade Braking assists when driving downhill. It maintains vehicle speed by automatically implementing a shift pattern that uses the engine and the transmission to slow the vehicle. The system will automatically command downshifts to reduce vehicle speed. The normal shift pattern will return once the vehicle is on a low grade or when the accelerator pedal is pressed.

While in the Electronic Range Select (ERS) mode, grade braking is deactivated, allowing the driver to select a range and limiting the highest gear available. Grade braking is available for normal driving and in Tow/Haul Mode.

See *Automatic Transmission* ⇨ *204*.

Drive Systems

All-Wheel Drive

For information on All-Wheel Drive (AWD), see *Driver Mode Control* ⇨ *216*.

Brakes

Antilock Brake System (ABS)

This vehicle has an Antilock Brake System (ABS), an advanced electronic braking system that helps prevent a braking skid.

When the vehicle begins to drive away, ABS checks itself.
A momentary motor or clicking noise may be heard while this test is going on, and it may even be noticed that the brake pedal moves a little. This is normal.

If there is a problem with ABS, this warning light stays on. See *Antilock Brake System (ABS) Warning Light* ⇨ *131*.

If driving safely on a wet road and it becomes necessary to slam on the brakes and continue braking to avoid a sudden obstacle, a computer senses the wheels are slowing down. If one of the wheels is about to stop rolling, the computer will separately work the brakes at each wheel.

ABS can change the brake pressure to each wheel, as required, faster than any driver could. This can help you steer around the obstacle while braking hard.

As the brakes are applied, the computer keeps receiving updates on wheel speed and controls braking pressure accordingly.

Remember: ABS does not change the time needed to get a foot up to the brake pedal or always decrease stopping distance. If you get too close to the vehicle in front of you, there will not be enough time to apply the brakes if that vehicle suddenly slows or stops. Always leave enough room up ahead to stop, even with ABS.

Using ABS

Do not pump the brakes. Just hold the brake pedal down firmly and let ABS work. You may hear the ABS pump or motor operating and feel the brake pedal pulsate. This is normal.

Braking in Emergencies

ABS allows you to steer and brake at the same time. In many emergencies, steering can help more than even the very best braking.

Electric Parking Brake

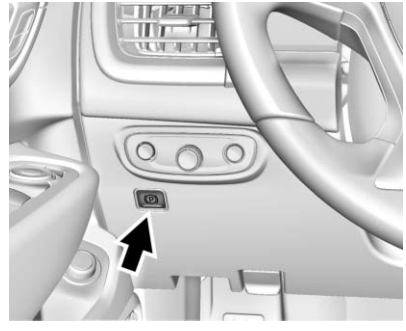

The vehicle has an Electric Parking Brake (EPB). The EPB can always be activated, even if the ignition is off. To prevent draining the battery, avoid repeated cycles of the EPB system when the engine is not running.

The system has a (P) or PARK Electric Parking Brake light, and a (P) Service Parking Brake light or Service Parking Brake message. See *Electric Parking Brake Light* ⇨ *130* and *Service Electric Parking Brake Light (Uplevel Only)* ⇨ *130*.

Before leaving the vehicle, check for the (P) or PARK light to ensure that the parking brake is applied.

EPB Apply

To apply the EPB:

1. Be sure the vehicle is at a complete stop.
2. Press the EPB switch momentarily.

The (P) or PARK light will flash and then stay on once the EPB is fully applied. If the (P) or PARK light flashes continuously, then the EPB is only partially applied or there is a problem with the EPB. A Driver Information Center (DIC) message will display. Release the EPB and try to apply it again. If the light does not come on, or keeps flashing, have the vehicle serviced. Do not drive the vehicle if the (P) or PARK light is flashing. See your dealer. See *Electric Parking Brake Light* ⇨ *130*.

If the (P) light or Service Parking Brake message is on, press the EPB switch and hold it. Continue to hold the switch until the (P) or PARK light remains on. If the (P) light or Service Parking Brake message remains on, see your dealer.

If the EPB is applied while the vehicle is moving, the vehicle will decelerate as long as the switch is pressed. If the switch is pressed until the vehicle comes to a stop, the EPB will remain applied.

The vehicle may automatically apply the EPB in some situations when the vehicle is not moving. This is normal, and is done to periodically check the correct operation of the EPB system.

If the EPB fails to apply, block the rear wheels to prevent vehicle movement.

EPB Release

To release the EPB:

1. Turn the ignition on or to ACC/ACCESSORY.
2. Apply and hold the brake pedal.
3. Press the EPB switch momentarily.

The EPB is released when the (P) or PARK light is off.

If the (P) light or Service Parking Brake message is on, release the EPB by pressing and holding the

EPB switch. Continue to hold the switch until the Ⓟ or PARK light is off. If either light stays on after release is attempted, see your dealer.

Caution
Driving with the parking brake on can overheat the brake system and cause premature wear or damage to brake system parts. Make sure that the parking brake is fully released and the brake warning light is off before driving.

Automatic EPB Release

The EPB will automatically release if the vehicle is running, placed into gear, and an attempt is made to drive away. Avoid rapid acceleration when the EPB is applied, to preserve parking brake lining life.

Brake Assist

The Brake Assist feature is designed to assist the driver in stopping or decreasing vehicle speed in emergency driving conditions. This feature uses the stability system hydraulic brake control module to supplement the power brake system under conditions where the driver has quickly and forcefully applied the brake pedal in an attempt to quickly stop or slow down the vehicle. The stability system hydraulic brake control module increases brake pressure at each corner of the vehicle until the ABS activates. Minor brake pedal pulsation or pedal movement during this time is normal and the driver should continue to apply the brake pedal as the driving situation dictates. The Brake Assist feature will automatically disengage when the brake pedal is released or brake pedal pressure is quickly decreased.

Hill Start Assist (HSA)

This vehicle has a Hill Start Assist (HSA) feature, which may be useful when the vehicle is stopped on a grade sufficient enough to activate HSA. This feature is designed to prevent the vehicle from rolling, either forward or rearward, during vehicle drive off. After the driver completely stops and holds the vehicle in a complete standstill on a grade, HSA will be automatically activated. During the transition period between when the driver releases the brake pedal and starts to accelerate to drive off on a grade, HSA holds the braking pressure for a maximum of two seconds to ensure that there is no rolling. The brakes will automatically release when the accelerator pedal is applied within the two-second window. It will not activate if the vehicle is in a drive gear and facing downhill, or if the vehicle is facing uphill and in R (Reverse). To change the duration, see “Extended Hill Start Assist” in *Vehicle Personalization* ⇨ *142*.

Ride Control Systems

Traction Control/ Electronic Stability Control

System Operation

The vehicle has a Traction Control System (TCS) and StabiliTrak, an electronic stability control system. These systems help limit wheel slip and assist the driver in maintaining control, especially on slippery road conditions.

TCS activates if it senses that any of the drive wheels are spinning or beginning to lose traction. When this happens, TCS applies the brakes to the spinning wheels and reduces engine power to limit wheel spin.

StabiliTrak activates when the vehicle senses a difference between the intended path and the direction the vehicle is actually traveling. StabiliTrak selectively applies braking pressure to any one of the vehicle wheel brakes to assist the driver in keeping the vehicle on the intended path.

If cruise control is being used and TCS or StabiliTrak begins to limit wheel spin, cruise control will disengage. Cruise control may be turned back on when road conditions allow.

Both systems come on automatically when the vehicle is started and begins to move. The systems may be heard or felt while they are operating or while performing diagnostic checks. This is normal and does not mean there is a problem with the vehicle.

It is recommended to leave both systems on for normal driving conditions, but it may be necessary to turn TCS off if the vehicle gets stuck in sand, mud, ice, or snow. See *If the Vehicle Is Stuck* ⇨ *180* and “Turning the Systems Off and On” later in this section.

The indicator light for both systems is in the instrument cluster. This light will:

- Flash when TCS is limiting wheel spin
- Flash when StabiliTrak is activated
- Turn on and stay on when either system is not working

If either system fails to turn on or to activate, a message displays in the Driver Information Center (DIC), and comes on and stays on to indicate that the system is inactive and is not assisting the driver in maintaining control. The vehicle is safe to drive, but driving should be adjusted accordingly.

If comes on and stays on:

1. Stop the vehicle.

2. Turn the engine off and wait 15 seconds.
3. Start the engine.

Drive the vehicle. If comes on and stays on, the vehicle may need more time to diagnose the problem. If the condition persists, see your dealer.

Turning the Systems Off and On (Uplevel Cluster)

Caution
Do not repeatedly brake or accelerate heavily when TCS is off. The vehicle driveline could be damaged.

At speeds of 56 km/h (35 mph) or above, this ability to turn off or on is disabled.

TCS and StabiliTrak can be turned off or on using the DIC controls as follows:

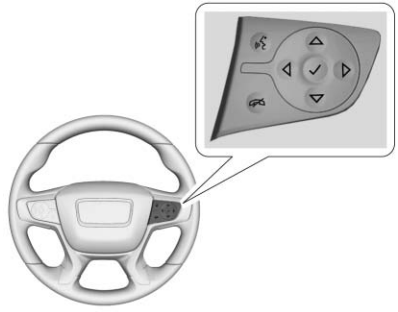

Press ◁ to access the cluster applications. Use △ or ▽ to scroll through the list of available applications.

Press ✓ to select the Options application, then press ▷ to enter the Options menu. Use △ or ▽ to scroll through items in the Options menu.

Press ✓ to select the Traction and Stability page, then press ▷ to select Traction menu. Use △ or ▽ to select Traction (TCS) or Stability (StabiliTrak).

To turn TCS off, select Traction, then press ✓. The TCS icon on the DIC will change from On to Off and illuminates in the instrument cluster.

To turn TCS back on, select Traction, then press ✓. The TCS icon on the DIC will change from Off to On and goes out in the instrument cluster. TCS cannot be on when StabiliTrak is off.

To turn StabiliTrak off, select Stability, then press ✓. The StabiliTrak icon on the DIC will change from On to Off. If TCS was on when StabiliTrak was turned off, both will turn off and and OFF illuminate.

To turn StabiliTrak back on, select Stability then press ✓. The StabiliTrak icon on the DIC will change from Off to On and goes out in the instrument cluster.

To turn both StabiliTrak and TCS back on, select Traction, then press ✓. The StabiliTrak and TCS icons on the DIC will change from Off to On and and go out in the instrument cluster.

Adding accessories can affect the vehicle performance. See *Accessories and Modifications* ⇨ *261*.

Turning the Systems Off and On (Base Level DIC)

Caution
Do not repeatedly brake or accelerate heavily when TCS is off. The vehicle driveline could be damaged.

At speeds of 56 km/h (35 mph) or above, this ability to turn off or on is disabled.

TCS and StabiliTrak can be turned off or on using the DIC controls as follows:

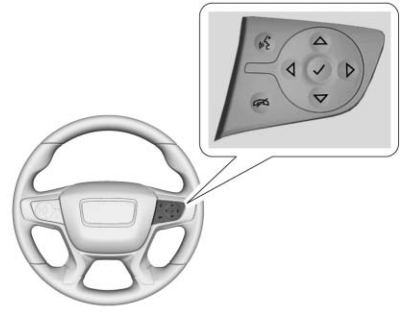

Press ◁ or ▷ to select VEHICLE menu, then use △ or ▽ to scroll through the menu items to select TCS/StabiliTrak.

Press ✓ to enter TC/StabiliTrak, and then use △ or ▽ to select TCS or StabiliTrak.

To turn TCS off, select TCS, then press ✓. will illuminate in the instrument cluster.

To turn TCS back on, select TCS, then press ✓. goes out in the instrument cluster. TCS cannot be on when StabiliTrak is off.

To turn StabiliTrak off, select StabiliTrak, then press ✓. If TCS was on when StabiliTrak was turned off, both will turn off and and illuminate in the instrument cluster.

To turn StabiliTrak back on, select StabiliTrak then press ✓. goes out in the instrument cluster.

To turn both StabiliTrak and TCS back on, select Traction, then press ✓. and go out in the instrument cluster.

Adding accessories can affect the vehicle performance. See *Accessories and Modifications* ⇨ *261*.

Hill Descent Control (HDC)

HDC can be used when driving downhill. It sets and maintains vehicle speed while descending a very steep incline in a forward or reverse gear.

The HDC switch is on the center console.

Press to enable or disable HDC. Vehicle speed must be below 50 km/h (31 mph).

The HDC light displays on the instrument cluster when enabled.

HDC can maintain vehicle speeds between 3 and 22 km/h (2 and 14 mph) on an incline greater than or equal to a 10% grade. A blinking HDC light indicates the system is actively applying the brakes to maintain vehicle speed.

When HDC is activated, the initial HDC speed is set to the current driving speed. It can be increased or decreased by pressing +RES or –SET on the steering wheel or by applying the accelerator or brake pedal. This adjusted speed becomes the new set speed.

HDC will remain enabled between 22 and 60 km/h (14 and 37 mph); however vehicle speed cannot be set or maintained in this range. It will automatically disable if the vehicle speed is above 80 km/h (50 mph) or above 60 km/h (37 mph) for at least 30 seconds.

Press again to re-enable HDC.

Driver Mode Control

Driver Mode Control Knob for FWD

Driver Mode Control Knob for AWD

(Vehicles without AWD) or (AWD equipped vehicles) Tour Mode : Use Tour Mode during normal driving conditions. Tour Mode either puts the vehicle in Front-Wheel Drive (AWD vehicles) or is the normal drive mode (FWD vehicles). Tour Mode is the most fuel efficient drive mode. See *Driving for Better Fuel Economy* ⇨ *26*. When selecting Tour Mode, the AWD light will flash briefly while the system disables, and then stays off.

AWD Mode : In AWD Mode, the AWD system delivers power to all four wheels and the system adjusts as needed to improve traction. Selecting AWD Mode will activate the system. The AWD light will flash briefly while the system is engaging and stay on to indicate AWD is active. AWD Mode will stay selected until the mode is changed. AWD is active in Tow/Haul and Off-Road Modes. AWD Mode is only available on vehicles equipped with All-Wheel Drive.

Tow/Haul and Off-Road Modes are canceled with each ignition cycle and will return to the Tour Mode.

When using a compact spare tire on an AWD vehicle, the system automatically detects the compact spare and reduces AWD performance to protect the system. To restore full AWD operation and prevent excessive wear on the system, replace the compact spare tire with a full-size tire as soon as possible. See *Compact Spare Tire* ⇨ *334*.

Snow Mode : Snow Mode improves vehicle acceleration on snow and ice-covered roads. Snow Mode is not available on vehicles equipped with all wheel drive.

Off-Road Mode : Use Off-Road Mode for public off-road recreational driving. See *Off-Road Driving* ⇨ *174*. Off-Road Mode is only available on vehicles equipped with All-Wheel Drive.

Tow/Haul Mode : Tow/Haul Mode can assist when towing or hauling a heavy load. It changes transmission shift patterns, turns on AWD, if equipped, and increases trailer sway control assistance. When Tow/Haul is activated, the Tow/Haul symbol will come on in the instrument cluster. See *Driving Characteristics and Towing Tips* ⇨ *251*. Tow/Haul Mode is only available on vehicles with the towing package.

Automatic Engine Grade Braking assists when driving downhill. It maintains vehicle speed by automatically implementing a shift pattern that uses the engine and the transmission to slow the vehicle. The system will automatically command downshifts to reduce vehicle speed. The normal shift pattern will return once the vehicle is on a low grade or when the accelerator pedal is pressed.

While in the Electronic Range Select (ERS) Mode, grade braking is deactivated, allowing the driver to select a range and limiting the highest gear available. Grade braking is available for normal driving and in Tow/Haul Mode. See *Manual Mode* ⇨ *208*.

Mode Name In Cluster Menu:	Tour	AWD	Snow	Off-Road	Tow/Haul
Mode Availability	AWD & FWD	AWD	FWD	AWD	Towing Package (AWD & FWD)
Retained Across Ignition Cycles	Yes	Yes	No	No	No
Pedal Map	Normal	Normal	Off-Road	Off-Road	Normal
Auto Transmission Schedule	Normal	Normal	Normal	Normal	Tow/Haul
AWD (If Equipped)	Normal FWD	Normal AWD	NA	Off-Road AWD	Normal AWD
Steering	Normal	Normal	Normal	Normal	Normal
Trailer Sway Control	Normal	Normal	Normal	Normal	Tow/Haul
StabiliTrak Setting	Normal	Normal	Normal	Off-Road	Normal
Traction Control Setting	Normal	Normal	Normal	Off-Road	Normal

Cruise Control

The cruise control lets the vehicle maintain a speed of about 40 km/h (25 mph) or more without keeping your foot on the accelerator. Cruise control does not work at speeds below 40 km/h (25 mph).

⚠ Warning

Cruise control can be dangerous where you cannot drive safely at a steady speed. Do not use cruise control on winding roads or in heavy traffic.

Cruise control can be dangerous on slippery roads. On such roads, fast changes in tire traction can cause excessive wheel slip, and you could lose control. Do not use cruise control on slippery roads.

With the Traction Control System (TCS) or Electronic Stability Control (ESC), the system may begin to limit wheel spin while you are using cruise control. If this happens, the cruise control will automatically disengage. See *Traction Control/ Electronic Stability Control* ⇨ *213*. If a collision alert occurs when cruise control is activated, cruise control is disengaged. See *Forward Collision Alert (FCA) System* ⇨ *228*. When road conditions allow you to safely use it again, cruise control can be turned back on.

Cruise control will disengage if either TCS or StabiliTrak is turned off.

If Hill Descent Control (HDC) is engaged, cruise control disengages. See *Hill Descent Control (HDC)* ⇨ *216*.

If the brakes are applied, cruise control disengages.

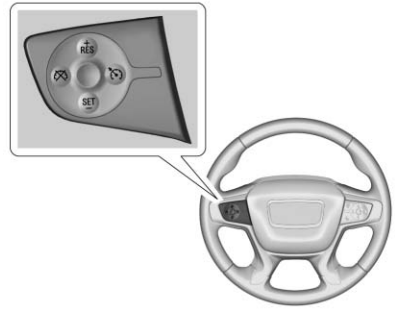

: Press to turn the cruise control system on and off. A white indicator comes on in the instrument cluster when cruise control is turned on.

: Press to disengage cruise control without erasing the set speed from memory.

+RES : If there is a set speed in memory, press briefly to resume that speed or press and hold to accelerate. If cruise control is already active, use to increase vehicle speed.

–SET : Press briefly to set the speed and activate cruise control. If cruise control is already active, use to decrease vehicle speed.

Setting Cruise Control

If is on when not in use, –SET or +RES could get bumped and go into cruise when not desired. Keep off when cruise is not being used.

To set a speed:

1. Press to turn the cruise system on.
2. Get up to the desired speed.
3. Press and release –SET. The desired set speed briefly appears in the instrument cluster.
4. Remove your foot from the accelerator pedal.

The cruise control indicator on the instrument cluster turns green after cruise control has been set to the desired speed. See *Instrument Cluster* ⇨ *119*.

Resuming a Set Speed

If the cruise control is set at a desired speed and then the brakes are applied or is pressed, the cruise control is disengaged without erasing the set speed from memory.

Once the vehicle speed reaches about 40 km/h (25 mph) or more, briefly press +RES. The vehicle returns to the previous set speed.

Increasing Speed While Using Cruise Control

If the cruise control system is already activated:

- Press and hold +RES on the steering wheel until the vehicle accelerates to the desired speed, then release it.
- To increase the speed in small increments, briefly press +RES. For each press, the vehicle goes about 1 km/h (1 mph) faster.

The speedometer reading can be displayed in either English or metric units. See *Instrument Cluster* ⇨ *119*. The increment value used depends on the units displayed.

Reducing Speed While Using Cruise Control

If the cruise control system is already activated:

- Press and hold –SET until the desired lower speed is reached, then release it.
- To slow down in small increments, briefly press –SET. For each press, the vehicle goes about 1 km/h (1 mph) slower.

The speedometer reading can be displayed in either English or metric units. See *Instrument Cluster* ⇨ *119*. The increment value used depends on the units displayed.

Passing Another Vehicle While Using Cruise Control

Use the accelerator pedal to increase the vehicle speed. When you take your foot off the pedal, the vehicle will slow down to the previous set cruise speed. While pressing the accelerator pedal or shortly following the release to override cruise control, briefly

pressing –SET will result in cruise control set to the current vehicle speed.

Using Cruise Control on Hills

How well the cruise control works on hills depends upon the vehicle speed, load, and the steepness of the hills. When going up steep hills, you might have to step on the accelerator pedal to maintain the vehicle speed. When going downhill, you might have to brake or shift to a lower gear to keep your speed down. If the brake pedal is applied, cruise control will disengage.

Ending Cruise Control

There are four ways to end cruise control:

- Step lightly on the brake pedal.
- Press .
- Shift the transmission to N (Neutral).
- To turn off cruise control, press .

Erasing Speed Memory

The cruise control set speed is erased from memory if is pressed or if the ignition is turned off.

Driver Assistance Systems

This vehicle may have features that work together to help avoid crashes or reduce crash damage while driving, backing, and parking. Read this entire section before using these systems.

⚠ Warning

Do not rely on the Driver Assistance Systems. These systems do not replace the need for paying attention and driving safely. You may not hear or feel alerts or warnings provided by these systems. Failure to use proper care when driving may result in injury, death, or vehicle damage. See *Defensive Driving* ⇨ *171*.

(Continued)

Warning (Continued)

Under many conditions, these systems will not:

- Detect children, pedestrians, bicyclists, or animals.
- Detect vehicles or objects outside the area monitored by the system.
- Work at all driving speeds.
- Warn you or provide you with enough time to avoid a crash.
- Work under poor visibility or bad weather conditions.
- Work if the detection sensor is not cleaned or is covered by ice, snow, mud, or dirt.

(Continued)

Warning (Continued)

- Work if the detection sensor is covered up, such as with a sticker, magnet, or metal plate.
- Work if the area surrounding the detection sensor is damaged or not properly repaired.

Complete attention is always required while driving, and you should be ready to take action and apply the brakes and/or steer the vehicle to avoid crashes.

Audible or Safety Alert Seat

Some driver assistance features alert the driver of obstacles by beeping. To change the volume of the warning chime, see “Comfort and Convenience” under *Vehicle Personalization* ⇨ *142*.

If equipped with the Safety Alert Seat, the driver seat cushion may provide a vibrating pulse alert instead of beeping. To change this, see “Collision/Detection Systems” under *Vehicle Personalization* ⇨ *142*.

Assistance Systems for Parking or Backing

If equipped, the Rear Vision Camera (RVC), Rear Parking Assist (RPA), Front Parking Assist (FPA), Surround Vision, Front Vision Camera, Rear Cross Traffic Alert (RCTA), and Automatic Parking Assist (APA) may help the driver park or avoid objects. Always check around the vehicle when parking or backing.

Rear Vision Camera (RVC)

When the vehicle is shifted into R (Reverse), the RVC displays an image of the area behind the vehicle in the infotainment display. The previous screen displays when the vehicle is shifted out of R (Reverse) after a short delay. To return to the previous screen sooner, press any button on the infotainment display, shift into P (Park), or reach a vehicle

speed of 12 km/h (8 mph). Select Guidance Lines on the infotainment display to enable or disable the guidance lines.

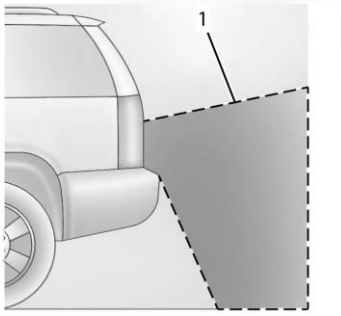

1. View Displayed by the Rear Vision Camera

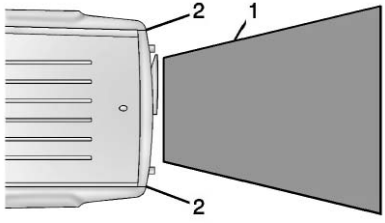

1. View Displayed by the Rear Vision Camera
2. Corners of the Rear Bumper

Displayed images may be farther or closer than they appear. The area displayed is limited and objects that are close to either corner of the bumper or under the bumper do not display.

A warning triangle may display to show that Rear Parking Assist (RPA) has detected an object. This triangle changes from amber to red and increases in size the closer the object.

Surround Vision

If equipped, Surround Vision displays an image of the area surrounding the vehicle, along with the front or rear camera views in the infotainment display. The front camera is in the grille or near the front emblem, the side cameras are on the bottom of the outside mirrors, and the rear camera is above the license plate.

⚠ Warning

The Surround Vision cameras have blind spots and will not display all objects near the corners of the vehicle. Folding side mirrors that are out of position will not display surround view correctly. Always check around the vehicle when parking or backing.

1. Views Displayed by the Surround Vision Cameras
2. Area Not Shown

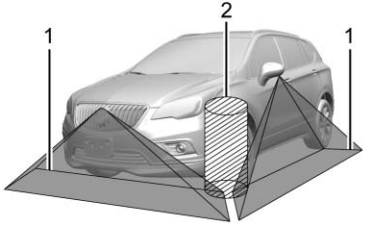

1. Views Displayed by the Surround Vision Cameras
2. Area Not Shown

Front Vision Camera

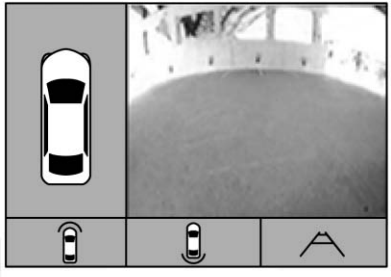

If equipped, a view of the area in front of the vehicle displays. The view displays after shifting from R (Reverse) to a forward gear, or by touching CAMERA in the infotainment display, and when the vehicle is moving forward slower than 8 km/h (5 mph). If equipped, the Front Vision Camera also displays when the Parking Assist system detects an object within 30 cm (12 in).

⚠ Warning

The camera(s) do not display children, pedestrians, bicyclists, crossing traffic, animals, or any other object outside of the cameras' field of view, below the bumper, or under the vehicle. Shown distances may be different from actual distances. Do not drive or park the vehicle using only these camera(s). Always check behind and around the vehicle before driving. Failure to use proper care may result in injury, death, or vehicle damage.

Parking Assist

With RPA, and if equipped with FPA, as the vehicle moves at speeds of less than 8 km/h (5 mph), the sensors on the bumpers may detect objects up to 2.5 m (8 ft) behind the vehicle and 1.2 m (4 ft) in front of the vehicle within a zone 25 cm (10 in) high off the ground and below bumper level. These detection distances may be shorter during warmer or humid weather. Blocked sensors will not detect objects and can also cause false detections. Keep the sensors clean of mud, dirt, snow, ice, and slush; and clean sensors after a car wash in freezing temperatures.

⚠ Warning

The Parking Assist system does not detect children, pedestrians, bicyclists, animals, or objects located below the bumper or that are too close or too far from the vehicle. It is not available at

(Continued)

Warning (Continued)

speeds greater than 8 km/h (5 mph). To prevent injury, death, or vehicle damage, even with Parking Assist, always check the area around the vehicle and check all mirrors before moving forward or backing.

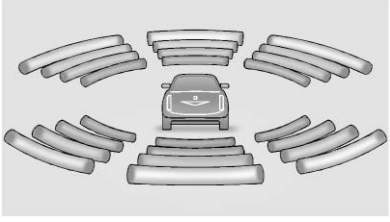

The instrument cluster may have a parking assist display with bars that show “distance to object” and object location information for the Parking Assist system. As the object gets closer, more bars light up and the bars change color from yellow to amber to red.

When an object is first detected in the rear, one beep will be heard from the rear, or both sides of the Safety Alert Seat will pulse two times. When an object is very close (<0.6 m (2 ft) in the vehicle rear, or <0.3 m (1 ft) in the vehicle front), five beeps will sound from the front or rear depending on object location, or both sides of the Safety Alert Seat will pulse five times. Beeps for FPA are higher pitched than for RPA.

Rear Cross Traffic Alert (RCTA)

If equipped, when the vehicle is shifted into R (Reverse), RCTA displays a red warning triangle with a left or right pointing arrow to warn of traffic coming from the left or right. This system detects objects coming from up to 20 m (65 ft) from the left or right side of the vehicle. When an object is detected, either three beeps sound from the left or right or three Safety Alert Seat pulses occur on the left or right side, depending on the direction of the detected vehicle.

Use caution while backing up when towing a trailer, as the RCTA detection zones that extend out from the back of the vehicle do not move further back when a trailer is towed.

Turning the Features On or Off

The P button on the center console is used to turn on or off the Front and Rear Parking Assist and the Rear Cross Traffic Alert (RCTA). The indicator light in the button comes on when the features are on and turns off when the features have been disabled.

Turn off parking assist and RCTA when towing a trailer.

RCTA can be turned off through “Collision/Detection Systems” under *Vehicle Personalization* ⇨ *142*.

Automatic Parking Assist (APA)

If equipped, APA searches for and steers the vehicle into parallel and perpendicular parking spots. When using APA, you must still shift gears, and control the brakes and

accelerator. A display and audible beeps help to guide parking maneuvers.

⚠ Warning

APA does not apply the brakes. APA may not detect objects in the parking space, objects that are soft or narrow, objects high off the ground such as flatbed trucks, or objects below ground level such as large potholes. Always verify that the parking space is appropriate for parking a vehicle. APA does not respond to changes in the parking space, such as movement of an adjacent vehicle, or a person or object entering the parking space. APA does not detect or avoid traffic that is behind or alongside of the vehicle. Always be prepared to stop the vehicle during the parking maneuver.

Press P on the center console to enable the system to search for a parking space that is large enough and within 1.5 m (5 ft) of the vehicle. The vehicle speed must be below 30 km/h (18 mph). The system cannot:

- Detect whether it is a legal parking space.
- Park exactly lined up with the vehicle next to it if the spot is approached at an angle or if the parking space is angled.
- Park exactly centered in a spot that is marked too large.
- Always detect short curbs.

When enabled, APA searches for parallel parking spaces to the right of the vehicle. To search for a parking space to the left, turn on the left turn signal or, if available, change the side selection in the infotainment display. To switch the parking mode between parallel and perpendicular, press and hold P during the search process or, if available, change the parking mode in the infotainment display.

After completely passing a large enough space, an audible beep occurs and a red stop symbol is displayed.

If the vehicle is in R (Reverse), but does not steer into the expected space, this may be because the system is maneuvering the vehicle into a previously detected space. The APA system does not need service.

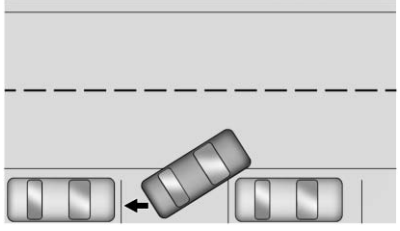

APA will instruct the vehicle to stop once a large enough space is found. Follow the displayed instructions. When instructed to drive in reverse, shift to R (Reverse) to engage automatic steering. The steering wheel will briefly vibrate as a reminder to remove hands from the steering wheel. Check surroundings and continue braking or accelerating as needed, and be prepared to stop to avoid vehicles, pedestrians, or objects.

If the vehicle exceeds 10 km/h (6 mph), APA is automatically disengaged and automatic steering will turn off. A progress arrow displays the status of the parking maneuver. Depending on the space size, additional maneuvers may be required, and there will be additional instructions. When changing gears, allow the automatic steering to complete before continuing the parking maneuver. Upon successful completion of a maneuver, APA will beep and display a PARKING COMPLETE message. Place the vehicle in P (Park).

APA may automatically disengage if:

- The steering wheel is used by the driver.
- The maximum allowed speed is exceeded.
- There is a failure with the APA system.
- Electronic stability control or antilock brakes are activated.
- A high priority vehicle message is displayed in the Driver Information Center (DIC).

To cancel APA, press P again.

When the System Does Not Seem to Work Properly

The APA system may require a short period of driving along curves to calibrate.

Assistance Systems for Driving

If equipped, when driving the vehicle in a forward gear, Forward Collision Alert (FCA), Lane Departure Warning (LDW), Lane Keep Assist (LKA), Side Blind Zone Alert (SBZA), Lane Change Alert (LCA), and/or Forward Automatic Braking (FAB) can help to avoid a crash or reduce crash damage.

Forward Collision Alert (FCA) System

If equipped, the FCA system may help to avoid or reduce the harm caused by front-end crashes. When approaching a vehicle ahead too quickly, FCA provides a red flashing alert on the windshield and rapidly beeps or pulses the driver seat.

FCA also lights an amber visual alert if following another vehicle much too closely.

FCA detects vehicles within a distance of approximately 60 m (197 ft) and operates at speeds above 8 km/h (5 mph).

⚠ Warning

FCA is a warning system and does not apply the brakes. When approaching a slower-moving or stopped vehicle ahead too rapidly, or when following a vehicle too closely, FCA may not provide a warning with enough time to help avoid a crash. It also may not provide any warning at all. FCA does not warn of pedestrians, animals, signs, guardrails, bridges, construction barrels, or other objects. Be ready to take action and apply the brakes. See *Defensive Driving* ⇨ *171*.

FCA can be disabled with the FCA steering wheel control, or if equipped, through vehicle personalization. See “Collision/ Detection Systems” under *Vehicle Personalization* ⇨ *142*.

Detecting the Vehicle Ahead

FCA warnings will not occur unless the FCA system detects a vehicle ahead. When a vehicle is detected, the vehicle ahead indicator will display green. Vehicles may not be detected on curves, highway exit ramps, or hills, due to poor visibility; or if a vehicle ahead is partially blocked by pedestrians or other objects. FCA will not detect another vehicle ahead until it is completely in the driving lane.

⚠ Warning

FCA does not provide a warning to help avoid a crash, unless it detects a vehicle. FCA may not detect a vehicle ahead if the FCA sensor is blocked by dirt, snow, or ice, or if the windshield is damaged. It may also not detect a vehicle on winding or hilly roads, or in conditions that can limit visibility such as fog, rain, or snow, or if the headlamps or windshield are not cleaned or in proper condition. Keep the windshield, headlamps, and FCA sensors clean and in good repair.

Collision Alert

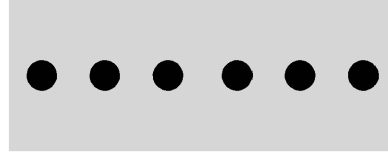

When your vehicle approaches another detected vehicle too rapidly, the red FCA display will flash on the windshield. Also, eight rapid high-pitched beeps will sound from the front, or both sides of the Safety Alert Seat will pulse five times. When this Collision Alert occurs, the brake system may prepare for driver braking to occur more rapidly which can cause a brief, mild deceleration. Continue to apply the brake pedal as needed. Cruise control may be disengaged when the Collision Alert occurs.

Tailgating Alert

The vehicle ahead indicator will display amber when you are following a vehicle ahead much too closely.

Selecting the Alert Timing

The Collision Alert control is on the steering wheel. Press to set the FCA timing to Far, Medium, or Near, or on some vehicles, Off. The first button press shows the current setting on the DIC. Additional button presses will change this setting. The chosen setting will remain until it is changed and will affect the timing of both the Collision Alert and the Tailgating Alert features. The timing of both alerts will vary based on vehicle speed. The faster the vehicle speed, the farther away the alert will occur. Consider traffic and weather conditions when selecting the alert timing. The range of selectable alert timings may not be appropriate for all drivers and driving conditions.

Following Distance Indicator

The following distance to a moving vehicle ahead in your path is indicated in following time in seconds on the Driver Information Center (DIC). See *Driver Information Center (DIC)* ⇨ *136*. The minimum following time is 0.5 seconds away. If there is no vehicle detected ahead, or the vehicle ahead is out of sensor range, dashes will be displayed.

Unnecessary Alerts

FCA may provide unnecessary alerts for turning vehicles, vehicles in other lanes, objects that are not vehicles, or shadows. These alerts are normal operation and the vehicle does not need service.

Cleaning the System

If the FCA system does not seem to operate properly, this may correct the issue:

- Clean the outside of the windshield in front of the rearview mirror.
- Clean the entire front of the vehicle.
- Clean the headlamps.

Forward Automatic Braking (FAB)

If the vehicle has Forward Collision Alert (FCA), it also has FAB, which includes Intelligent Brake Assist (IBA). When the system detects a vehicle ahead in your path that is traveling in the same direction that you may be about to crash into, it can provide a boost to braking or automatically brake the vehicle. This can help avoid or lessen the severity of crashes when driving in a forward gear. Depending on the situation, the vehicle may automatically brake moderately or hard. This forward automatic braking can only occur if a vehicle is detected. This is shown by the FCA vehicle ahead indicator being lit. See *Forward Collision Alert (FCA) System* ⇨ *228*.

The system works when driving in a forward gear between 8 km/h (5 mph) and 60 km/h (37 mph). It can detect vehicles up to approximately 60 m (197 ft).

⚠ Warning

FAB is an emergency crash preparation feature and is not designed to avoid crashes. Do not rely on FAB to brake the vehicle. FAB will not brake outside of its operating speed range and only responds to detected vehicles.

FAB may not:

- Detect a vehicle ahead on winding or hilly roads.
- Detect all vehicles, especially vehicles with a trailer, tractors, muddy vehicles, etc.
- Detect a vehicle when weather limits visibility, such as in fog, rain, or snow.
- Detect a vehicle ahead if it is partially blocked by pedestrians or other objects.

(Continued)

Warning (Continued)

Complete attention is always required while driving, and you should be ready to take action and apply the brakes and/or steer the vehicle to avoid crashes.

FAB may slow the vehicle to a complete stop to try to avoid a potential crash. If this happens, FAB may engage the Electric Parking Brake (EPB) to hold the vehicle at a stop. Release the EPB or firmly press the accelerator pedal.

⚠ Warning

FAB may automatically brake the vehicle suddenly in situations where it is unexpected and undesired. It could respond to a turning vehicle ahead, guardrails, signs, and other non-moving objects. To override FAB, firmly press the accelerator pedal, if it is safe to do so.

Intelligent Brake Assist (IBA)

IBA may activate when the brake pedal is applied quickly by providing a boost to braking based on the speed of approach and distance to a vehicle ahead.

Minor brake pedal pulsations or pedal movement during this time is normal and the brake pedal should continue to be applied as needed. IBA will automatically disengage only when the brake pedal is released.

⚠ Warning

IBA may increase vehicle braking in situations when it may not be necessary. You could block the flow of traffic. If this occurs, take your foot off the brake pedal and then apply the brakes as needed.

FAB and IBA can be disabled through vehicle personalization. See “Collision/Detection Systems” under *Vehicle Personalization* ⇨ *142*.

⚠ Warning

Using FAB or IBA while towing a trailer could cause you to lose control of the vehicle and crash. Turn the system to Alert or Off when towing a trailer.

A system unavailable message may display if:

- The front of the vehicle or windshield is not clean.
- Heavy rain or snow is interfering with object detection.
- There is a problem with the StabiliTrak system.

The FAB system does not need service.

Side Blind Zone Alert (SBZA)

If equipped, the SBZA system is a lane-changing aid that assists drivers with avoiding crashes that occur with moving vehicles in the side blind zone (or spot) areas.

When the vehicle is in a forward gear, the left or right side mirror display will light up if a moving vehicle is detected in that blind zone. If the turn signal is activated and a vehicle is also detected on the same side, the display will flash as an extra warning not to change lanes. Since this system is part of the Lane Change Alert (LCA) system, read the entire LCA section before using this feature.

Lane Change Alert (LCA)

If equipped, the LCA system is a lane-changing aid that assists drivers with avoiding lane change crashes that occur with moving vehicles in the side blind zone (or spot) areas or with vehicles rapidly approaching these areas from behind. The LCA warning display will light up in the corresponding outside mirror and will flash if the turn signal is on.

⚠ Warning

LCA does not alert the driver to vehicles outside of the system detection zones, pedestrians, bicyclists, or animals. It may not provide alerts when changing lanes under all driving conditions. Failure to use proper care when changing lanes may result in injury, death, or vehicle damage. Before making a lane change, always check mirrors, glance over your shoulder, and use the turn signals.

LCA Detection Zones

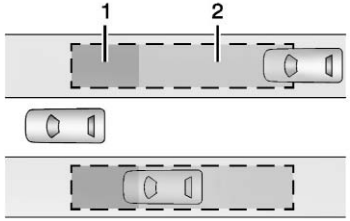

1. SBZA Detection Zone
2. LCA Detection Zone

The LCA sensor covers a zone of approximately one lane over from both sides of the vehicle, or 3.5 m (11 ft). The height of the zone is approximately between 0.5 m (1.5 ft) and 2 m (6 ft) off the ground. The Side Blind Zone Alert (SBZA) warning area starts at approximately the middle of the vehicle and goes back 5 m (16 ft). Drivers are also warned of vehicles rapidly approaching from up to 25 m (82 ft) behind the vehicle.

How the System Works

The LCA symbol lights up in the side mirrors when the system detects a moving vehicle in the next lane over that is in the side blind zone or rapidly approaching that zone from behind. A lit LCA symbol indicates it may be unsafe to change lanes. Before making a lane change, check the LCA display, check mirrors, glance over your shoulder, and use the turn signals.

Left Side Mirror Display

Right Side Mirror Display

When the vehicle is started, both outside mirror LCA displays will briefly come on to indicate the system is operating. When the vehicle is in a forward gear, the left or right side mirror display will light up if a moving vehicle is detected in the next lane over in that blind zone or rapidly approaching that zone. If the turn signal is activated in the same direction as a detected vehicle, this display will flash as an extra warning not to change lanes.

LCA can be disabled through vehicle personalization. See “Collision/Detection Systems” under *Vehicle Personalization* ⇨ *142*. If LCA is disabled by the driver, the LCA mirror displays will not light up.

When the System Does Not Seem to Work Properly

The LCA system requires some driving for the system to calibrate to maximum performance. This calibration may occur more quickly if the vehicle is driving on a straight highway road with traffic and roadside objects (e.g., guardrails, barriers).

LCA displays may not come on when passing a vehicle quickly, for a stopped vehicle, or when towing a trailer. The LCA detection zones that extend back from the side of the vehicle do not move further back when a trailer is towed. Use caution while changing lanes when towing a trailer. LCA may alert to objects attached to the vehicle, such as a trailer, bicycle, or object extending out to either side of the vehicle. Attached objects may also interfere with the detection of vehicles. This is normal system operation; the vehicle does not need service.

LCA may not always alert the driver to vehicles in the next lane over, especially in wet conditions or when driving on sharp curves. The system does not need to be serviced. The system may light up due to guardrails, signs, trees, shrubs, and other non-moving objects. This is normal system operation; the vehicle does not need service.

LCA may not operate when the LCA sensors in the left or right corners of the rear bumper are covered with mud, dirt, snow, ice, or slush, or in heavy rainstorms. For cleaning instructions, see "Washing the Vehicle" under *Exterior Care* ⇨ *341*. If the Driver Information Center (DIC) displays the system unavailable message after cleaning both sides of the vehicle toward the rear corners of the vehicle, see your dealer.

If the LCA displays do not light up when moving vehicles are in the side blind zone or are rapidly approaching this zone and the system is clean, the system may need service. Take the vehicle to your dealer.

Radio Frequency Information

See *Radio Frequency Statement* ⇨ *379*.

Lane Departure Warning (LDW)

If equipped, LDW may help avoid crashes due to unintentional lane departures. It may provide a warning if the vehicle is crossing a detected lane marking without using a turn signal in the lane departure direction. Since this system is part of the Lane Keep Assist (LKA) system, read the entire LKA section before using this feature.

Lane Keep Assist (LKA)

If equipped, LKA may help avoid crashes due to unintentional lane departures. It may assist by gently turning the steering wheel if the vehicle approaches a detected lane marking without using a turn signal in that direction. It may also provide a Lane Departure Warning (LDW) system alert as the lane marking is crossed. The LKA system will not

assist or provide an LDW alert if it detects that you are actively steering. Override LKA by turning the steering wheel. LKA uses a camera to detect lane markings between 60 km/h (37 mph) and 180 km/h (112 mph).

⚠ Warning

The LKA system does not continuously steer the vehicle. It may not keep the vehicle in the lane or give a Lane Departure Warning (LDW) alert, even if a lane marking is detected.

The LKA and LDW systems may not:

- Provide an alert or enough steering assist to avoid a lane departure or crash.
- Detect lane markings under poor weather or visibility conditions. This can occur if the windshield or headlamps are blocked by dirt, snow, or ice, if they are

(Continued)

Warning (Continued)

not in proper condition, or if the sun shines directly into the camera.

- Detect road edges.
- Detect lanes on winding or hilly roads.

If LKA only detects lane markings on one side of the road, it will only assist or provide an LDW alert when approaching the lane on the side where it has detected a lane marking. Even with LKA and LDW, you must steer the vehicle. Always keep your attention on the road and maintain proper vehicle position within the lane, or vehicle damage, injury, or death could occur. Always keep the windshield, headlamps, and camera sensors clean and in good repair. Do not use LKA in bad weather conditions.

⚠ Warning

Using LKA while towing a trailer or on slippery roads could cause loss of control of the vehicle and a crash. Turn the system off.

How the System Works

The LKA camera sensor is on the windshield ahead of the rearview mirror.

To turn LKA on and off, press on the center console.

When on, is green if LKA is available to assist and provide LDW alerts. It may assist by gently turning the steering wheel and display as amber if the vehicle approaches a detected lane marking without using a turn signal in that direction. It may also provide an LDW alert by flashing amber as the lane marking is crossed. Additionally, there may be three beeps, or the driver seat may pulse

three times, on the right or left, depending on the lane departure direction.

Take Steering

The LKA system does not continuously steer the vehicle. If LKA does not detect active driver steering, then an alert, chime, or Driver Information Center (DIC) message may be provided. Steer the vehicle to dismiss.

When the System Does Not Seem to Work Properly

The system performance may be affected by:

- Close vehicles ahead.
- Sudden lighting changes, such as when driving through tunnels.
- Banked roads.
- Roads with poor lane markings, such as two-lane roads.

If the LKA system is not functioning properly when lane markings are clearly visible, cleaning the windshield may help.

A system unavailable message may display if the camera is blocked. The LKA system does not need service.

LKA assistance and/or LDW alerts may occur due to tar marks, shadows, cracks in the road, temporary or construction lane markings, or other road imperfections. This is normal system operation; the vehicle does not need service. Turn LKA off if these conditions continue.

Fuel

Fuel (Gasoline)

GM recommends the use of TOP TIER detergent gasoline to keep the engine cleaner and reduce engine deposits. See www.toptiergas.com for a list of TOP TIER detergent gasoline marketers and applicable countries.

Do not use any fuel labeled E85 or FlexFuel. Do not use gasoline with ethanol levels greater than 15% by volume.

For the LYX 1.5L L4 turbo engine, use regular unleaded gasoline meeting ASTM specification D4814 with a posted octane rating of 87 or higher. Do not use gasoline with a posted octane rating of less than 87, as this may cause engine knock and will lower fuel economy.

For the LTG 2.0L L4 turbo engine, premium unleaded gasoline meeting ASTM specification D4814 with a posted octane rating of 93 is highly recommended for best performance and fuel economy. Unleaded gasoline with an octane rated as low as 87 can be used. Using unleaded gasoline rated below 93 octane, however, will lead to reduced acceleration and fuel economy. If knocking occurs, use a gasoline rated at 93 octane as soon as possible, otherwise, the engine could be damaged. If heavy knocking is heard when using gasoline with a 93 octane rating, the engine needs service.

Prohibited Fuels

Caution

Do not use fuels with any of the following conditions; doing so may damage the vehicle and void its warranty:

- For vehicles which are not FlexFuel, fuel labeled greater than 15% ethanol by volume, such as mid-level ethanol blends (16 – 50% ethanol), E85, or FlexFuel.
- Fuel with any amount of methanol, methylal, and aniline. These fuels can corrode metal fuel system parts or damage plastic and rubber parts.
- Fuel containing metals such as methylcyclopentadienyl manganese tricarbonyl (MMT), which can damage the emissions control system and spark plugs.

(Continued)

Caution (Continued)

- Fuel with a posted octane rating of less than the recommended fuel. Using this fuel will lower fuel economy and performance, and may decrease the life of the emissions catalyst.

California Fuel Requirements (Gasoline)

If the vehicle is certified to meet California Emissions Standards, it is designed to operate on fuels that meet California specifications. See the underhood emission control label. If this fuel is not available in states adopting California Emissions Standards, the vehicle will operate satisfactorily on fuels meeting federal specifications, but emission control system performance may be affected. The malfunction indicator lamp could turn on and the vehicle may not pass a smog-check test. See *Malfunction Indicator Lamp (Check Engine Light)* ⇨ *127*. If this

occurs, return to your authorized dealer for diagnosis. If it is determined that the condition is caused by the type of fuel used, repairs may not be covered by the vehicle warranty.

Fuels in Foreign Countries (Gasoline)

The U.S., Canada, and Mexico post fuel octane ratings in anti-knock index (AKI). For fuel not to use in a foreign country, see “Prohibited Fuels” in *Fuel (Gasoline)* ⇨ *236*.

Fuel Additives

To keep fuel systems clean, TOP TIER detergent gasoline is recommended. See *Fuel (Gasoline)* ⇨ *236*.

If TOP TIER detergent gasoline is not available, one bottle of GM Fuel System Treatment Cleaner added to the fuel tank at every engine oil change, can help. GM Fuel System Treatment Cleaner is the only gasoline additive recommended by General Motors. It is available at your dealer.

Fuel for Diesel Engines

The selection of a high quality fuel is important for maintaining optimum performance. Do not use diesel fuel with more than 15 ppm sulfur content. Do not use a diesel blend containing more than 20% biodiesel by volume. Both diesel and biodiesel blends must meet all the requirements as defined in the most current versions of the local fuel standards. See the recommended fuels under *What Fuel to Use in the U.S. (Diesel)* ⇨ *239* and *What Fuel to Use in Canada and Mexico (Diesel)* ⇨ *240*.

Caution

Engine damage may occur if recommended fuels are not used, which may void the vehicle warranty. Some improper fuels are:

- Diesel fuel with the addition of gasoline.
- Diesel fuel mixed with engine oil or automatic transmission fluid.
- Triglyceride fuels, such as raw vegetable oil or animal fat, in any form, including with blends of diesel or biodiesel.
- Marine diesel fuel and fuel oils.
- Diesel-water emulsions, such as Aquazole.

(Continued)

Caution (Continued)

- Aftermarket diesel fuel additives, which contain alcohols, organo-metallic additives, or water emulsifiers.
- Diesel fuel with sulfur greater than 15 ppm.
- Diesel-biodiesel blends not within the required specification.

Some conditions, such as dirty fuel, may decrease fuel filter life and a CHANGE FUEL FILTER message may come on in the Driver Information Center (DIC).

What Fuel to Use in the U.S. (Diesel)

Use of diesel fuel with ultra low sulfur content (15 ppm, maximum) is required. Look for service station fuel dispensers with this label in green:

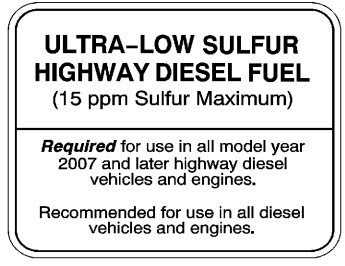

The diesel fuel must meet ASTM International specification D 975, Grades No. 2-D or No. 1-D S15, also known as Ultra Low Sulfur Diesel. Contact a fuel supplier or fueling station with any questions.

Diesel Fuel Grades

For best results use No. 2-D diesel fuel year-round because it is blended for seasonal temperature differences, both above and below freezing conditions. No. 1-D diesel also meeting ASTM International D975 fuel can be used in very cold temperatures (below −18 °C or 0 °F); however, it will reduce power and fuel economy. Avoid using No. 1-D diesel fuel in warm or hot climates. It can result in stalling, poor starting when the engine is hot, and damage to the fuel injection system.

Premium Diesel Fuel

Premium Diesel Fuel (FQP-1A) corresponds to the Engine Manufacturers Association (EMA) Recommended Guideline. It may provide less noise, better starting, and better vehicle performance, but is not required.

Biodiesel Blends

Retail pumps dispensing blends containing up to 5% biodiesel (B5) are not required to be labeled with the concentration of biodiesel. Blends up to B5 must meet ASTM D975 (Grades No. 2-D or No. 1-D S15 Ultra Low Sulfur Diesel). When refueling with a biodiesel blend above B5, one of the following labels should appear on the dispenser:

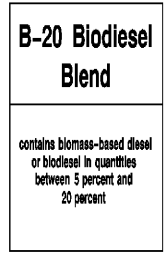

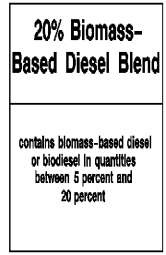

Blends containing more than 5% and up to 20% biodiesel must meet ASTM specification D7467 (Biodiesel blend, B6 - B20) and are labeled with an orange or blue pump label. To reduce the risk of poor quality fuel, purchase biodiesel blends from a fuel supplier or fueling station that sells BQ-9000 certified biodiesel. See www.bq-9000.org for a list of certified marketers. See *Biodiesel* ⇨ *241*.

What Fuel to Use in Canada and Mexico (Diesel)

What Fuel to Use in Canada

Use of diesel fuel with ultra low sulfur content (15 ppm, maximum) is required. Use diesel fuel that meets the CAN/CGSB-3.517 specification in Canada. Contact a fuel supplier with questions about fuel.

Caution

Use of diesel fuel other than Ultra Low Sulfur Diesel (15 ppm sulfur maximum) will cause damage to the exhaust after-treatment system. This damage would not

(Continued)

Caution (Continued)

be covered by the vehicle warranty. Do not use marine, locomotive, or boiler distillate fuel since it may contain higher sulfur levels.

Diesel Fuel Types

For best results use Ultra Low Sulfur Type B Diesel. This fuel is blended for seasonal changes. In extreme cold temperatures (below −18 °C or 0 °F) Ultra Low Sulfur Type A Diesel fuel can be used, but it may cause power and fuel economy losses. Avoid using Type A Diesel fuel in warm or hot climates. Doing so can result in stalling, poor starting when the engine is hot, and damage to the fuel injection system.

Premium Diesel Fuel

If available, premium diesel fuel (FQP-1A) corresponding to the Engine Manufacturers Association (EMA) Recommended Guideline could provide better starting and vehicle performance with less noise.

Biodiesel Blends in Canada

Biodiesel blends that meet the CAN/CGSB-3.522 specifications up to 20% (B20) can be used. Avoid the use of biodiesel blends above 20%, as they may damage the engine and fuel system. For detailed information on the use of biodiesel, see *Biodiesel* ⇨ *241*.

What Fuel to Use in Mexico

Use diesel fuel specification NOM-086 Pemex UBA, which meets the Ultra Low Sulfur Diesel fuel requirement of 15 ppm sulfur maximum. This fuel is not available in all regions of Mexico.

Caution

Use of diesel fuel other than Ultra Low Sulfur Diesel (15 ppm sulfur maximum) will cause damage to the exhaust after-treatment

(Continued)

Caution (Continued)

system. This damage would not be covered by the vehicle warranty. Do not use marine, locomotive, or boiler distillate fuel since it may contain higher sulfur levels.

Biodiesel

Biodiesel is a renewable fuel produced from vegetable oils or animal fats that have been chemically modified to make it compatible with diesel fuel.

Caution

Do not use home-made biodiesel or home test kits because the quality cannot be verified by approved scientific methods. Do not use raw vegetable oil or other unmodified bio-oils, fats, or blends of vegetable oil with diesel. They could damage the

(Continued)

Caution (Continued)

fuel system and engine, and damages would not be covered by the vehicle warranty.

Caution

Do not use blends containing more than 20% biodiesel. Any engine, fuel system, or exhaust after-treatment system damage would not be covered by the vehicle warranty.

Biodiesel fuel quality degrades with time and exposure to high temperature quicker than Ultra Low Sulfur Diesel fuel. More frequent refueling provides the best opportunity to have a supply of fresh fuel. Storage at hot ambient temperatures will accelerate biodiesel degradation.

Owners who use very little fuel, or who have vehicles stored for extended periods of time, should avoid the use of biodiesel blended fuels above 5% by volume. When vehicles are stored for longer than one month, they should be run out of biodiesel to below one-quarter tank, refueled with Ultra Low Sulfur Diesel fuel, and driven at least 32 km (20 mi) before storage.

At temperatures below 0 °C (32 °F), it is recommended to switch to Ultra Low Sulfur Diesel fuel with no biodiesel content, or to blends with biodiesel containing less than 5% by volume. At these extreme cold temperatures, biodiesel blends higher than 5% by volume may cause fuel filter plugging and system gelling, which can lead to vehicle operability problems.

Fuels improperly blended for cold temperature operation may result in restricted fuel filters and degraded vehicle performance. GM diesel vehicles are equipped with a fuel heating system to provide an extra level of protection against filter plugging from gelling or waxing of conventional diesel fuel and biodiesel blends. If the operating temperature is far below the temperature at which gelling or waxing of the fuel occurs, the system cannot prevent all cases of filter plugging.

If the vehicle experiences a fuel filter restriction, the on-board monitoring system will alert the driver that the fuel filter requires service. The fuel filter, however, will not prevent all damage caused by poor quality biodiesel.

Cold Weather Operation (Diesel)

In cold weather, the fuel filter may become clogged by wax naturally present in the fuel. To unclog it, move the vehicle to a warm garage area and allow the filter to warm up. The fuel filter may need to be replaced. See *Fuel Filter Replacement (Diesel)* ⇨ *246*.

At temperatures below 0 °C (32 °F), it is recommended to avoid using biodiesel blends above 5% blend. This blend may cause fuel filter plugging, system gelling, and

freezing that may affect vehicle starting. You may need to turn the ignition on and off a few times before the vehicle will start. Also, idle the vehicle for a couple of minutes before accelerating.

Water in Fuel (Diesel)

Improper fuel tank inspection or cleaning, or contaminated fuel from suppliers, can cause water to be pumped into the fuel tank along with the diesel fuel. If a WATER IN FUEL - CONTACT SERVICE message displays, the water must be drained immediately.

⚠ Warning

Diesel fuel containing water is still combustible. You or others could be burned. If the fuel needs to be drained, keep sparks, flames, and smoking materials away from the mixture.

Caution

Water in the diesel fuel can corrode internal components of the fuel system and lead to severe damage. It can also support fungus or bacteria growth, which can damage the fuel system and fuel operated heater (FOH) (if equipped). Even with a diesel fuel biocide, the fuel system may still need to be cleaned. Your dealer can advise of the appropriate solution.

If the fuel tank needs to be purged to remove water, see your dealer or a qualified technician. Improper purging can damage the fuel system and block the FOH.

As an added precaution, drain the diesel fuel filter of residual water at every engine oil change. If the WATER IN FUEL - CONTACT SERVICE message comes on frequently, even after draining water from the fuel filter, see your dealer.

Water in Fuel Troubleshooting

If the WATER IN FUEL - CONTACT SERVICE message comes on:

Problem	Recommended Action
Message displays but goes off during the ignition cycle.	The fuel filter is partially filled with water. Drain the water as soon as possible. See "Removing Water from the Fuel Filter" following.

Problem	Recommended Action
Message displays and stays on.	Drain the fuel filter immediately. If no water can be drained, and the temperature is below freezing, then water may be frozen in the filter. Move the vehicle to a warm location to thaw the water, then drain the fuel. If water still does not drain, see your dealer.

Problem	Recommended Action
Immediately after refueling, message displays and stays on.	A large amount of water is in the fuel tank. Drain the fuel filter immediately. If the message stays on or comes back on without refueling, then fuel tank purging is required. See your dealer. If the message displays and the engine stalls or runs rough, do not drive until the water contaminated fuel is drained.

Caution

Driving with this message on can damage the fuel injection system and the engine. If the message comes on right after a refuel, water was pumped into the fuel tank. Turn off the engine and drain the water immediately.

Removing Water from the Fuel Filter

To drain water:

1. Turn the engine off and apply the parking brake.
2. Place a container under the filter drain valve, which is on the bottom of the fuel filter.

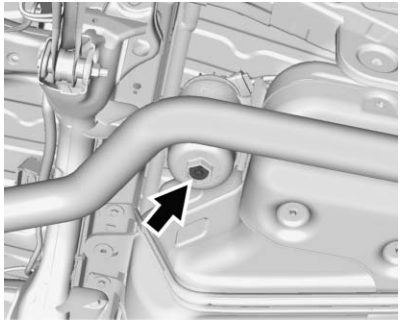

FWD Shown, AWD Similar

3. Turn the drain plug counterclockwise using a suitable tool.
4. With the engine off, press and hold ENGINE START/STOP without applying the brake for five seconds to place the vehicle in Service Mode. See *Ignition Positions* ⇨ *186*. Wait approximately five seconds, and then press ENGINE START/STOP again to turn it off. This operation will enhance water flow out of the filter. The filter is drained as soon as diesel fuel emerges from the port.
5. Retighten the drain plug by turning it clockwise.
6. Properly dispose of the water contaminated fuel.
7. Start the engine and let it run for a few minutes. During the draining process, air may have entered the fuel system. If the engine stalls, the fuel system may need to be primed. See “Fuel Priming” following.

Fuel Priming

For the fuel system to work properly, air cannot be in the fuel lines. If air gets in, the engine may not start and the fuel lines will need to be primed before operating the vehicle.

If air is present, the following may have happened:

- The vehicle ran out of fuel.
- The fuel filter was removed.
- The fuel lines were removed or disconnected.
- The fuel filter water drain valve was opened while the engine was running.

To prime the fuel lines:

1. With the engine off, press and hold ENGINE START/STOP without applying the brake for five seconds to place the vehicle in Service Mode. See *Ignition Positions* ⇨ *186*. Wait approximately five seconds and press ENGINE START/STOP again to turn it off. Do this step three times or more while the engine is off.
2. Press and hold ENGINE START/STOP while applying the brake for a maximum of 40 seconds at a time, with five seconds between attempts, until the engine starts. If the engine tries to run, but does not run smoothly, increase the rpm’s slightly by using the accelerator pedal. This will help force air through the system.
3. Repeat Step 2 if the engine stalls and will not restart.

4. After a few attempts, if the engine still does not start, see your dealer.

Running Out of Fuel (Diesel)

⚠ Warning

Diesel fuel is flammable. It could start a fire if something ignites it, and people could be burned. Do not let it get on hot engine parts, and keep matches or other ignition sources away.

If the engine has stalled due to running out of fuel, add at least 7.6 L (2 gal) of fuel if parked on a level surface, or up to 18.9 L (5 gal) of fuel if parked on a slope, and perform the procedure under “Fuel Priming” previously in this section.

Fuel Filter Replacement (Diesel)

⚠ Warning

Diesel fuel is flammable. It could start a fire if something ignites it, and people could be burned. Do not let it get on hot engine parts, and keep matches or other ignition sources away.

The fuel filter is on the passenger side, in front of the rear tire.

1. Drain any water from the filter. See “Removing Water from the Fuel Filter” in *Water in Fuel (Diesel)* ⇨ *243*.

   Keep the engine off until the procedure is completed.

2. Apply the parking brake.

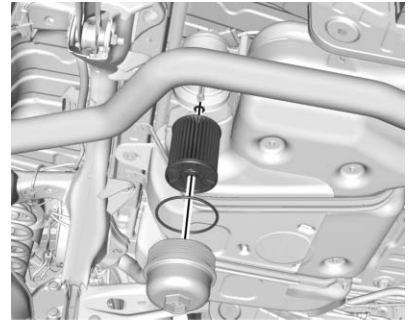

FWD Shown, AWD Similar

3. Remove the filter element cap by turning it counterclockwise.
4. Remove the filter element and o-rings. If there is any dirt on the filter sealing surface, clean it off.
5. Install the new filter element and o-rings.
6. Reinstall and tighten the filter cap to the housing.
7. Use the fuel filter priming procedure to prime the fuel filter. See “Fuel Priming” in *Water in Fuel (Diesel)* ⇨ *243*.

8. Start the engine and let it idle for five minutes. Check the fuel filter and air bleed valve for leaks.
9. Reset the fuel filter monitor. See *Driver Information Center (DIC)* ⇨ *136*.

Filling the Tank (Gasoline)

⚠ Warning

Fuel vapors and fuel fires burn violently and can cause injury or death.

- To help avoid injuries to you and others, read and follow all the instructions on the fuel pump island.
- Turn off the engine when refueling.
- Keep sparks, flames, and smoking materials away from fuel.

(Continued)

Warning (Continued)

- Do not leave the fuel pump unattended.
- Do not use a cell phone while refueling.
- Do not reenter the vehicle while pumping fuel.
- Keep children away from the fuel pump and never let children pump fuel.
- Fuel can spray out if the refueling nozzle is inserted too quickly. This spray can happen if the tank is nearly full, and is more likely in hot weather. Insert the refueling nozzle slowly and wait for any hiss noise to stop prior to beginning to flow fuel.

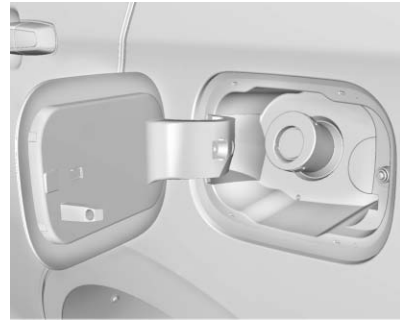

To open the fuel door, push and release the rearward center edge of the door.

The vehicle has a capless fuel system and does not have a fuel cap. The filling nozzle must be fully inserted and latched prior to starting fuel flow.

⚠ Warning

Overfilling the fuel tank by more than three clicks of a standard fill nozzle may cause:

- Vehicle performance issues, including engine stalling and damage to the fuel system.
- Fuel spills.
- Potential fuel fires.

Be careful not to spill fuel. Wait a few seconds after you have finished pumping before removing the nozzle. Clean fuel from painted surfaces as soon as possible. See *Exterior Care* ⇨ *341*.

⚠ Warning

If a fire starts while you are refueling, do not remove the nozzle. Shut off the flow of fuel by shutting off the pump or by notifying the station attendant. Leave the area immediately.

Filling the Tank with a Portable Gas Can

If the vehicle runs out of fuel and must be filled from a portable gas can:

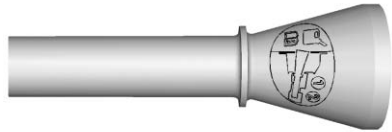

1. Locate the capless funnel adapter from under the spare tire.
2. Insert and latch the funnel into the capless fuel system.

⚠ Warning

Attempting to refuel without using the funnel adapter may cause fuel spillage and damage the capless fuel system. This could cause a fire and you or others could be badly burned and the vehicle could be damaged.

3. Remove and clean the funnel adapter and return it to the storage location.

Filling the Tank (Diesel)

⚠ Warning

Fuel vapors and fuel fires burn violently and can cause injury or death.

- To help avoid injuries to you and others, read and follow all the instructions on the fuel pump island.
- Turn off the engine when refueling.
- Keep sparks, flames, and smoking materials away from fuel.
- Do not leave the fuel pump unattended.
- Do not use a cell phone while refueling.

(Continued)

Warning (Continued)

- Do not re-enter the vehicle while pumping fuel.
- Keep children away from the fuel pump and never let children pump fuel.
- Fuel can spray out if the fuel cap is opened too quickly. This spray can happen if the tank is nearly full, and is more likely in hot weather. Open the fuel cap slowly and wait for any hiss noise to stop, then unscrew the cap all the way.

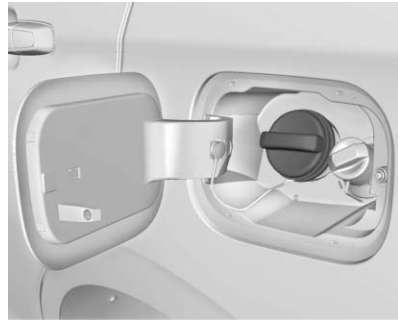

The fuel cap is behind a hinged fuel door on the driver side of the vehicle. To open the fuel door, push and release the rearward center edge of the door.

Turn the fuel cap counterclockwise to remove. Reinstall the cap by turning it clockwise until it clicks.

⚠ Warning

Overfilling the fuel tank by more than three clicks of a standard fill nozzle may cause:

- Fuel spills

(Continued)

Warning (Continued)

- Potential fuel fires

Be careful not to spill fuel. Wait a few seconds after you have finished pumping before removing the nozzle. Clean fuel from painted surfaces as soon as possible. See *Exterior Care* ⇨ *341*.

⚠ Warning

If a fire starts while you are refueling, do not remove the nozzle. Shut off the flow of fuel by shutting off the pump or by notifying the station attendant. Leave the area immediately.

Caution

If a new fuel cap is needed, be sure to get the right type of cap from your dealer. The wrong type

(Continued)

Caution (Continued)

of fuel cap may not fit properly, may cause the malfunction indicator lamp to light, and could damage the fuel tank and emissions system. See *Malfunction Indicator Lamp (Check Engine Light)* ⇨ *127*.

Diesel fuel can foam when filling the tank. This can cause the automatic pump nozzle to shut off, even if the tank is not full. If this happens, wait for the foaming to stop, and then fill the tank more slowly.

⚠ Warning

Heat coming from the engine can cause the fuel to expand and force the fuel out of the tank.
If something ignites the fuel, a fire could start. To help avoid this, fill the tank slowly and only until the nozzle shuts off. Do not top it off. Clean up any spilled fuel.

Accidental Refueling with Gasoline

If the vehicle is accidentally refueled with gasoline, do not continue driving the vehicle except to get to a location where it can be stopped safely. Driving the vehicle will damage the fuel system. Have the vehicle towed to a qualified technician to have the gasoline removed from the tank and fuel system. Flush the fuel system with Ultra Low Sulfur Diesel fuel to ensure all gasoline is removed.

Diesel Exhaust Fluid (DEF)

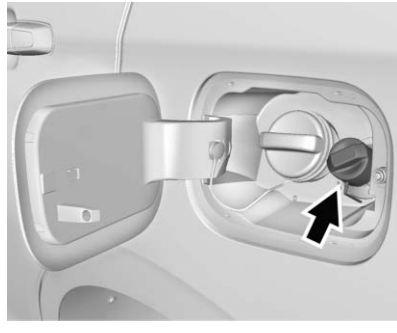

DEF is a non-toxic solution that is sprayed into the exhaust stream of diesel vehicles to cause a chemical reaction and break down NOx emissions into harmless nitrogen and water.

DEF is not a fuel additive and never comes into contact with diesel fuel. It is stored in a separate tank. The fill port is behind the fuel door next to the regular fuel cap. It has a blue filler cap. See *Diesel Exhaust Fluid* ⇨ *198*.

Filling a Portable Fuel Container

⚠ Warning

Filling a portable fuel container while it is in the vehicle can cause fuel vapors that can ignite either by static electricity or other means. You or others could be badly burned and the vehicle could be damaged. Always:

(Continued)

Warning (Continued)

- Use approved fuel containers.
- Remove the container from the vehicle, trunk, or pickup bed before filling.
- Place the container on the ground.
- Place the nozzle inside the fill opening of the container before dispensing fuel, and keep it in contact with the fill opening until filling is complete.
- Fill the container no more than 95% full to allow for expansion.
- Do not smoke, light matches, or use lighters while pumping fuel.
- Avoid using cell phones or other electronic devices.

Trailer Towing

General Towing Information

Only use towing equipment that has been designed for the vehicle. Contact your dealer or trailering dealer for assistance with preparing the vehicle for towing a trailer. Read the entire section before towing a trailer.

For towing a disabled vehicle, see *Towing the Vehicle* ⇨ *337*. For towing the vehicle behind another vehicle such as a motor home, see *Recreational Vehicle Towing* ⇨ *339*.

Driving Characteristics and Towing Tips

Driving with a Trailer

When towing a trailer:

- Become familiar with the state and local laws that apply specifically to trailer towing.
- Do not tow a trailer during the first 800 km (500 mi), to prevent damage to the engine, axle, or other parts.
- Then, during the first 800 km (500 mi) of trailer towing, do not drive over 80 km/h (50 mph) and do not make starts at full throttle.
- The vehicle can tow in D (Drive). Use a lower gear if the transmission shifts too often.
- Turn off Parking Assist when towing.
- Do not use the compact spare while towing.

⚠ Warning

When towing a trailer, exhaust gases may collect at the rear of the vehicle and enter if the liftgate, trunk/hatch, or rear-most window is open.

(Continued)

Warning (Continued)

When towing a trailer:

- Do not drive with the liftgate, trunk/hatch, or rear-most window open.
- Fully open the air outlets on or under the instrument panel.
- Also adjust the climate control system to a setting that brings in only outside air. See “Climate Control Systems” in the Index.

For information about carbon monoxide, see *Engine Exhaust* ⇨ *196*.

Towing a trailer requires a certain amount of experience. The combination you are driving is longer and not as responsive as the vehicle itself. Get acquainted with the handling and braking of the rig before setting out for the open road.

Before starting, check all trailer hitch parts and attachments, safety chains, electrical connectors, lamps, tires, and mirrors. If the trailer has electric brakes, start the combination moving and then apply the trailer brake controller by hand to be sure the brakes work.

During the trip, check occasionally to be sure that the load is secure and the lamps and any trailer brakes still work.

Towing with a Stability Control System

When towing, the sound of the stability control system might be heard. The system is reacting to the vehicle movement caused by the trailer, which mainly occurs during cornering. This is normal when towing heavier trailers.

Following Distance

Stay at least twice as far behind the vehicle ahead as you would when driving the vehicle without a trailer. This can help to avoid situations that require heavy braking and sudden turns.

Passing

More passing distance is needed when towing a trailer. Because the rig is longer, it is necessary to go farther beyond the passed vehicle before returning to the lane.

Backing Up

Hold the bottom of the steering wheel with one hand. To move the trailer to the left, move your hand to the left. To move the trailer to the right, move your hand to the right. Always back up slowly and, if possible, have someone guide you.

Making Turns

Caution

Making very sharp turns while trailering could cause the trailer to come in contact with the vehicle.

(Continued)

Caution (Continued)

The vehicle could be damaged. Avoid making very sharp turns while trailering.

When turning with a trailer, make wider turns than normal so the trailer will not strike soft shoulders, curbs, road signs, trees, or other objects. Use the turn signal well in advance and avoid jerky or sudden maneuvers.

Turn Signals When Towing a Trailer

The turn signal indicators in the instrument cluster flash whenever signaling a turn or lane change. Properly hooked up, the trailer lamps also flash, telling other drivers the vehicle is turning, changing lanes, or stopping.

When towing a trailer, the turn signal indicators in the instrument cluster flash for turns even if the bulbs on the trailer are burned out. Check occasionally to be sure the trailer bulbs are still working.

Driving on Grades

Reduce speed and shift to a lower gear before starting down a long or steep downgrade. If the transmission is not shifted down, the brakes might have to be used so much that they would get hot and no longer work well.

The vehicle can tow in D (Drive). Use a lower gear if the transmission shifts too often.

When towing at high altitude on steep uphill grades, engine coolant boils at a lower temperature than at normal altitudes. If the engine is turned off immediately after towing at high altitude on steep uphill grades, the vehicle could show signs similar to engine overheating. To avoid this, let the engine run while parked, preferably on level ground, with the transmission in P (Park) for a few minutes before turning the engine off. If the overheat warning comes on, see *Engine Overheating* ⇨ *280*.

Parking on Hills

⚠ Warning

Parking the vehicle on a hill with the trailer attached can be dangerous. If something goes wrong, the rig could start to move. People can be injured, and both the vehicle and the trailer can be damaged. When possible, always park the rig on a flat surface.

If parking the rig on a hill:

1. Press the brake pedal, but do not shift into P (Park) yet. Turn the wheels into the curb if facing downhill or into traffic if facing uphill.
2. Have someone place chocks under the trailer wheels.

3. When the wheel chocks are in place, release the brake pedal until the chocks absorb the load.
4. Reapply the brake pedal. Then apply the parking brake and shift into P (Park).
5. Release the brake pedal.

Leaving After Parking on a Hill

1. Apply and hold the brake pedal while you:
   - Start the engine.
   - Shift into a gear.
   - Release the parking brake.
2. Let up on the brake pedal.
3. Drive slowly until the trailer is clear of the chocks.
4. Stop and have someone pick up and store the chocks.

Maintenance When Trailer Towing

The vehicle needs service more often when pulling a trailer. See *Maintenance Schedule* ⇨ *353*. Things that are especially important in trailer operation are automatic transmission fluid, engine oil, axle lubricant, belts, cooling system, and brake system. Inspect these before and during the trip.

Check periodically to see that all hitch nuts and bolts are tight.

Engine Cooling When Trailer Towing

The cooling system may temporarily overheat during severe operating conditions. See *Engine Overheating* ⇨ *280*.

Trailer Towing

Before pulling a trailer, there are three important considerations that have to do with weight:

- The weight of the trailer
- The weight of the trailer tongue
- The total weight on the vehicle's tires

Weight of the Trailer

Safe trailering requires monitoring the weight, speed, altitude, road grades, outside temperature, the dimensions of the front of the trailer, and how frequently the vehicle is used to pull a trailer. Take into consideration any special equipment on the vehicle, and the amount of tongue weight the vehicle can carry. See “Weight of the Trailer Tongue” later in this section for more information.

Trailer weight rating (TWR) is calculated assuming the tow vehicle has the driver, a front seat passenger, and all required trailering equipment. Weight of additional optional equipment, passengers, and cargo in the tow vehicle must be subtracted from the trailer weight rating.

Ask your dealer for trailering information or advice. For kingpin weight and trailer tongue weight information, see “Weight of the Trailer Tongue” later in this section.

Use the following chart to determine how much the vehicle can weigh, based upon the vehicle model and options.

Vehicle	Maximum Trailer Weight with Trailer Brakes†	GCWR*
1.5L Gas FWD	680 kg (1,500 lb)	2 380 kg (5,247 lb)
1.5L Gas AWD	680 kg (1,500 lb)	2 480 kg (5,467 lb)
1.6L Diesel, 2.0L Gas	680 kg (1,500 lb)	2 580 kg (5,687 lb)
2.0L Gas with V92 Trailering Provisions	1 590 kg (3,505 lb)	3 490 kg (7,694 lb)

† For trailers without trailer brakes the maximum trailer weight is 454 kg (1,000 lb). See *Towing Equipment* ⇨ *256*.
* The Gross Combination Weight Rating (GCWR) is the total allowable weight of the completely loaded vehicle and trailer including any passengers, cargo, equipment, and conversions. Do not exceed the GCWR for the vehicle.

Ask your dealer for trailering information or advice.

Weight of the Trailer Tongue

The tongue load (1) of any trailer is an important weight to measure because it affects the total gross weight of the vehicle. The Gross Vehicle Weight (GVW) includes the curb weight of the vehicle, any cargo carried in it, and the people who will be riding in the vehicle. If there are a lot of options, equipment, passengers, or cargo in the vehicle, it will reduce the tongue weight the vehicle can carry, which will also reduce the trailer weight the vehicle can tow. If towing a trailer, the tongue load must be added to the GVW because the vehicle will be carrying that weight, too. See *Vehicle Load Limits* ⇨ *181*.

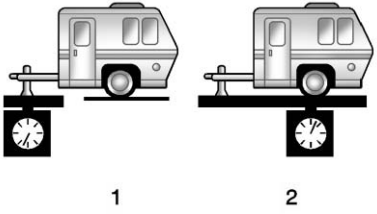

In general, trailer tongue weight (1) should be 10–15% of the loaded trailer weight (2). Some specific trailer types, such as boat trailers, fall outside of this range. Refer to the trailer owner's manual for the recommended trailer tongue weight. In all cases, do not exceed the maximum loads for the vehicle series and hitch type.

Total Weight on the Vehicle's Tires

Inflate the vehicle's tires to the upper limit for cold tires. These numbers can be found on the Certification label or see *Vehicle Load Limits* ⇨ *181* for more information. Do not go over the GVW limit for the vehicle, or the GAWR, including the weight of the trailer tongue. If using a weight-distributing hitch, do not go over the rear axle limit before applying the weight distribution spring bars.

Towing Equipment

Hitches

Use the correct hitch equipment. See your dealer or a hitch dealer for assistance.

- The rear bumper on the vehicle is not intended for hitches. Do not attach rental hitches or other bumper-type hitches to it. Use only a frame-mounted hitch that does not attach to the bumper.
- Will any holes be made in the body of the vehicle when the trailer hitch is installed? If so, seal the holes when the hitch is removed. If the holes are not sealed, dirt, water, and deadly carbon monoxide (CO) from the exhaust can get into the vehicle. See *Engine Exhaust* ⇨ *196*.

Hitch Cover

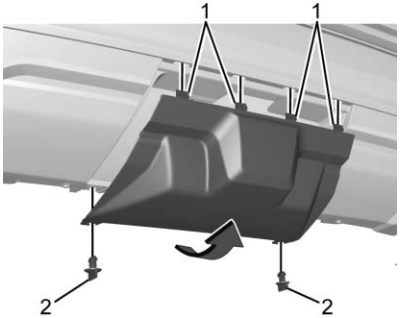

To remove the hitch cover:

1. Remove two fasteners (2).
2. Pull the bottom edge of the cover rearward.
3. Disengage the cover at the upper attachments (1) and remove.

Safety Chains

Always attach chains between the vehicle and the trailer. Cross the safety chains under the tongue of the trailer to help prevent the tongue from contacting the road if it becomes separated from the hitch. Leave enough slack so the rig can turn. Never allow safety chains to drag on the ground.

Trailer Brakes

A loaded trailer that weighs more than 454 kg (1,000 lb) must be equipped with its own brake system, with brakes working on all axles. Trailer braking equipment conforming to Canadian Standards Association (CSA) requirement CAN3-D313, or its equivalent, is recommended. State and local regulations may also require the trailer to have its own braking system if loaded above a certain threshold. These requirements vary from state to state. Read and follow the instructions for the trailer brakes so they are installed, adjusted, and maintained properly.

Do not tap into the vehicle's hydraulic brake system.

Trailer Sway Control (TSC)

The vehicle has a Trailer Sway Control (TSC) feature as part of the StabiliTrak system. If TSC detects that the trailer is swaying, the vehicle's brakes are automatically applied.

When TSC is applying the brakes, the TCS/StabiliTrak indicator light flashes to notify the driver to reduce speed. If the trailer continues to sway, StabiliTrak will reduce engine torque to help slow the vehicle.

TSC will not function if StabiliTrak is turned off. See *Traction Control/ Electronic Stability Control* ⇨ *213*.

Conversions and Add-Ons

Add-On Electrical Equipment

⚠ Warning

The Data Link Connector (DLC) is used for vehicle service and Emission Inspection/ Maintenance testing. See *Malfunction Indicator Lamp (Check Engine Light)* ⇨ *127*.
A device connected to the DLC — such as an aftermarket fleet or driver-behavior tracking device — may interfere with vehicle systems. This could affect vehicle operation and cause a crash. Such devices may also access information stored in the vehicle’s systems.

Caution

Some electrical equipment can damage the vehicle or cause components to not work and would not be covered by the vehicle warranty. Always check with your dealer before adding electrical equipment.

Add-on equipment can drain the vehicle's 12-volt battery, even if the vehicle is not operating.

The vehicle has an airbag system. Before attempting to add anything electrical to the vehicle, see *Servicing the Airbag-Equipped Vehicle* ⇨ *86* and *Adding Equipment to the Airbag-Equipped Vehicle* ⇨ *86*.

Vehicle Care

General Information
General Information 260
California Proposition 65 Warning 260
California Perchlorate Materials Requirements 261
Accessories and Modifications 261

Vehicle Checks
Doing Your Own Service Work 261
Hood 262
Engine Compartment Overview 264
Engine Oil 269
Engine Oil Life System 273
Automatic Transmission Fluid 274
Engine Air Cleaner/Filter 274
Cooling System 276
Engine Overheating 280
Washer Fluid 282
Brakes 282
Brake Fluid 283
Battery - North America 284
All-Wheel Drive 285
Starter Switch Check 285
Park Brake and P (Park) Mechanism Check 286
Wiper Blade Replacement 286
Windshield Replacement 287
Gas Strut(s) 287

Headlamp Aiming
Headlamp Aiming 289

Bulb Replacement
Bulb Replacement 289
Halogen Bulbs 289
High Intensity Discharge (HID) Lighting 289
LED Lighting 289
Front Turn Signal Lamps 289
Taillamps 290
License Plate Lamp 291

Electrical System
Electrical System Overload . . . 292
Fuses and Circuit Breakers . . . 292
Engine Compartment Fuse Block 293
Instrument Panel Fuse Block 296
Rear Compartment Fuse Block 298

Wheels and Tires
Tires 300
All-Season Tires 301
Winter Tires 301
Summer Tires 302
Tire Sidewall Labeling 302
Tire Designations 304
Tire Terminology and Definitions 305
Tire Pressure 307
Tire Pressure Monitor System 309
Tire Pressure Monitor Operation 310
Tire Inspection 313
Tire Rotation 314
When It Is Time for New Tires 315
Buying New Tires 315
Different Size Tires and Wheels 317
Uniform Tire Quality Grading 317
Wheel Alignment and Tire Balance 319
Wheel Replacement 319
Tire Chains 320
If a Tire Goes Flat 320
Tire Sealant and Compressor Kit 322
Storing the Tire Sealant and Compressor Kit 328

Tire Changing 329
Compact Spare Tire 334

Jump Starting
Jump Starting - North America 335

Towing the Vehicle
Towing the Vehicle 337
Recreational Vehicle Towing 339

Appearance Care
Exterior Care 341
Interior Care 346
Floor Mats 349

General Information

For service and parts needs, visit your dealer. You will receive genuine GM parts and GM-trained and supported service people.

Genuine GM parts have one of these marks:

ACDelco®

Genuine GM | Parts

GM Accessories

California Proposition 65 Warning

⚠ Warning

Most motor vehicles, including this one, as well as many of its service parts and fluids, contain and/or emit chemicals known to the State of California to cause cancer and birth defects or other reproductive harm. Engine exhaust, many parts and systems, many fluids, and some component wear by-products contain and/or emit these chemicals. For more information go to www.P65Warnings.ca.gov/passenger-vehicle.

See *Battery - North America* ⇨ *284* and *Jump Starting - North America* ⇨ *335* and the back cover.

California Perchlorate Materials Requirements

Certain types of automotive applications, such as airbag initiators, seat belt pretensioners, and lithium batteries contained in Remote Keyless Entry transmitters, may contain perchlorate materials. Special handling may be necessary. For additional information, see www.dtsc.ca.gov/hazardouswaste/perchlorate.

Accessories and Modifications

Adding non-dealer accessories or making modifications to the vehicle can affect vehicle performance and safety, including such things as airbags, braking, stability, ride and handling, emissions systems, aerodynamics, durability, and electronic systems like antilock brakes, traction control, and stability control. These accessories or modifications could even cause malfunction or damage not covered by the vehicle warranty.

Damage to suspension components caused by modifying vehicle height outside of factory settings will not be covered by the vehicle warranty.

Damage to vehicle components resulting from modifications or the installation or use of non-GM certified parts, including control module or software modifications, is not covered under the terms of the vehicle warranty and may affect remaining warranty coverage for affected parts.

GM Accessories are designed to complement and function with other systems on the vehicle. See your dealer to accessorize the vehicle using genuine GM Accessories installed by a dealer technician.

Also, see *Adding Equipment to the Airbag-Equipped Vehicle* ⇨ *86*.

Vehicle Checks

Doing Your Own Service Work

⚠ Warning

It can be dangerous to work on your vehicle if you do not have the proper knowledge, service manual, tools, or parts. Always follow owner's manual procedures and consult the service manual for your vehicle before doing any service work.

If doing some of your own service work, use the proper service manual. It tells you much more about how to service the vehicle than this manual can. To order the proper service manual, see *Service Publications Ordering Information* ⇨ *378*.

This vehicle has an airbag system. Before attempting to do your own service work, see *Servicing the Airbag-Equipped Vehicle* ⇨ *86*.

Keep a record with all parts receipts and list the mileage and the date of any service work performed. See *Maintenance Records* ⇨ *364*.

Caution
Even small amounts of contamination can cause damage to vehicle systems. Do not allow contaminants to contact the fluids, reservoir caps, or dipsticks.

Hood

To open the hood:

1. Pull the hood release lever with this symbol on it. It is on the lower left side of the instrument panel between the door and the steering wheel.

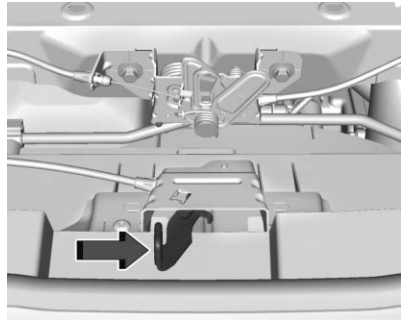

2. Go to the front of the vehicle to find the secondary hood release handle. The handle is under the front edge of the hood near the center. Push the handle to the right and raise the hood.

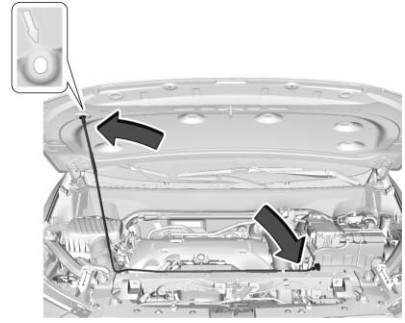

3. Release the hood prop from its retainer, located above the radiator. Securely place the hood prop into the slot on the underside of the hood.

To close the hood:

1. Before closing the hood, be sure all the filler caps are properly installed.
2. Lift the hood to relieve pressure on the hood prop. Remove the hood prop from the slot on the underside of the hood and return the prop to its retainer. The prop rod must

click into place when returning it to the retainer to prevent hood damage.

3. Lower the hood so that it is 30 cm (12 in) above the vehicle and release it so it fully latches.
4. Check to make sure the hood is closed. If not, repeat Steps 1–3 in the “To open the hood” section and then proceed with repeating Steps 1–4 in this section.

Engine Compartment Overview

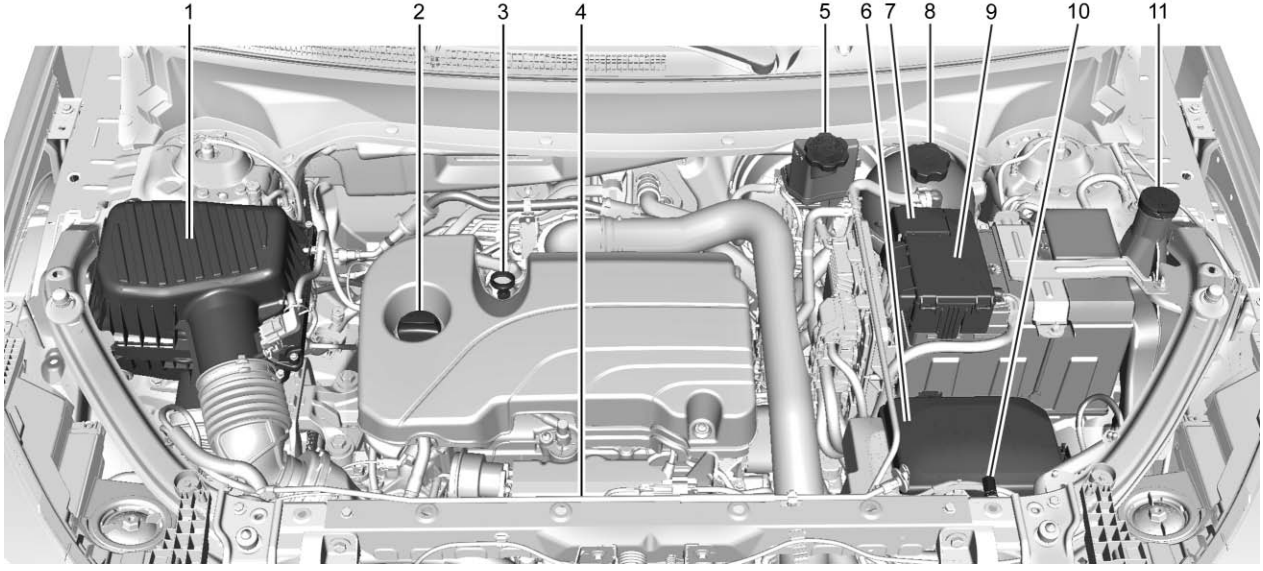

1.5L Gas Engine

1. *Engine Air Cleaner/Filter* ⇨ *274*.
2. Engine Oil Fill Cap. See *Engine Oil* ⇨ *269*.
3. Engine Oil Dipstick. See *Engine Oil* ⇨ *269*.
4. Engine Cooling Fan. See *Cooling System* ⇨ *276*.
5. Brake Fluid Reservoir. See *Brake Fluid* ⇨ *283*.
6. *Engine Compartment Fuse Block* ⇨ *293*.
7. Remote Positive (+) Terminal (Under Cover). See *Jump Starting - North America* ⇨ *335*.
8. Engine Coolant Surge Tank and Pressure Cap. See *Cooling System* ⇨ *276*.
9. *Battery - North America* ⇨ *284*.
10. Remote Negative (−) Terminal. See *Jump Starting - North America* ⇨ *335*.
11. Windshield Washer Fluid Reservoir. See *Washer Fluid* ⇨ *282*.

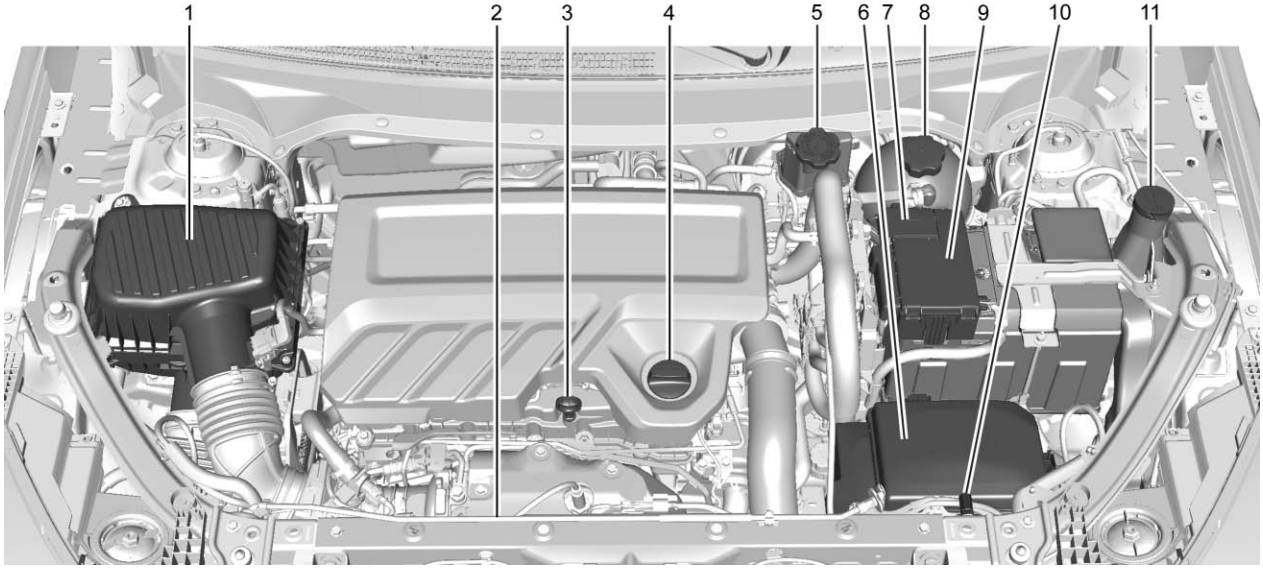

1.6L L4 Diesel Engine

1. *Engine Air Cleaner/Filter* ⇨ *274*.
2. Engine Cooling Fan. See *Cooling System* ⇨ *276*.
3. Engine Oil Dipstick. See *Engine Oil* ⇨ *269*.
4. Engine Oil Fill Cap. See *Engine Oil* ⇨ *269*.
5. Brake Fluid Reservoir. See *Brake Fluid* ⇨ *283*.
6. *Engine Compartment Fuse Block* ⇨ *293*.
7. Remote Positive (+) Terminal (Under Cover). See *Jump Starting - North America* ⇨ *335*.
8. Engine Coolant Surge Tank and Pressure Cap. See *Cooling System* ⇨ *276*.
9. *Battery - North America* ⇨ *284*.
10. Remote Negative (−) Terminal. See *Jump Starting - North America* ⇨ *335*.
11. Windshield Washer Fluid Reservoir. See *Washer Fluid* ⇨ *282*.

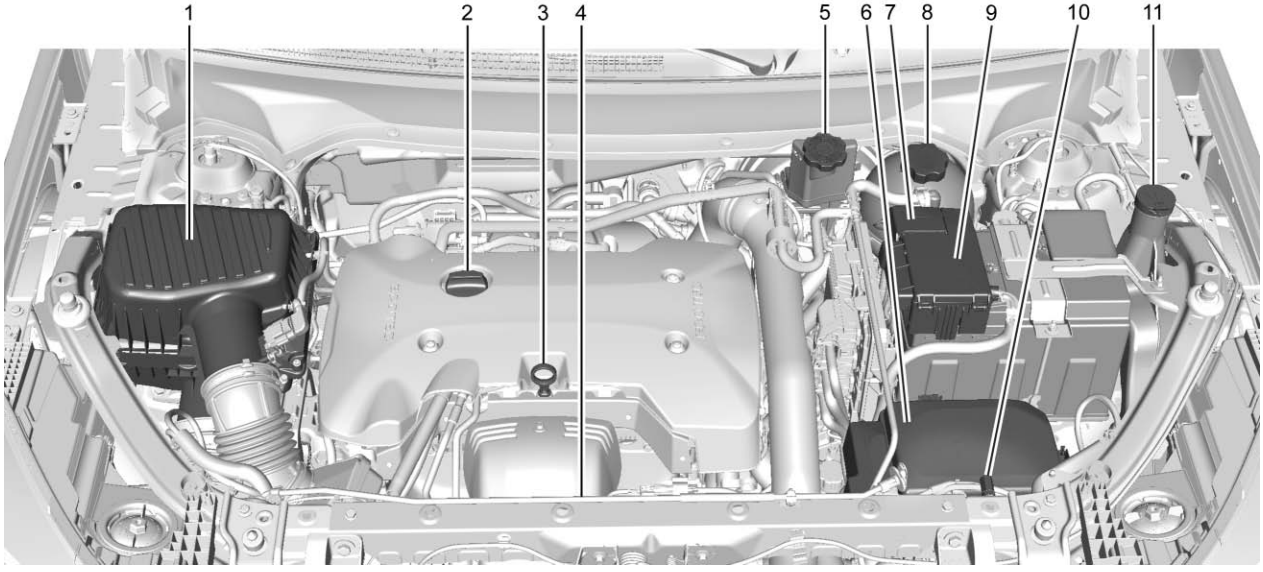

2.0L Gas Engine

1. *Engine Air Cleaner/Filter* ⇨ *274*.
2. Engine Oil Fill Cap. See *Engine Oil* ⇨ *269*.
3. Engine Oil Dipstick. See *Engine Oil* ⇨ *269*.
4. Engine Cooling Fan. See *Cooling System* ⇨ *276*.
5. Brake Fluid Reservoir. See *Brake Fluid* ⇨ *283*.
6. *Engine Compartment Fuse Block* ⇨ *293*.
7. Remote Positive (+) Terminal (Under Cover). See *Jump Starting - North America* ⇨ *335*.
8. Engine Coolant Surge Tank and Pressure Cap. See *Cooling System* ⇨ *276*.
9. *Battery - North America* ⇨ *284*.
10. Remote Negative (−) Terminal. See *Jump Starting - North America* ⇨ *335*.
11. Windshield Washer Fluid Reservoir. See *Washer Fluid* ⇨ *282*.

Engine Oil

To ensure proper engine performance and long life, careful attention must be paid to engine oil. Following these simple, but important steps will help protect your investment:

- Use engine oil approved to the proper specification and of the proper viscosity grade. See “Selecting the Right Engine Oil” in this section.
- Check the engine oil level regularly and maintain the proper oil level. See “Checking Engine Oil” and “When to Add Engine Oil” in this section.
- Change the engine oil at the appropriate time. See *Engine Oil Life System* ⇨ *273*.
- Always dispose of engine oil properly. See “What to Do with Used Oil” in this section.

Checking Engine Oil

Check the engine oil level regularly, every 650 km (400 mi), especially prior to a long trip. The engine oil dipstick handle is a loop. See *Engine Compartment Overview* ⇨ *264* for the location.

⚠ Warning

The engine oil dipstick handle may be hot; it could burn you. Use a towel or glove to touch the dipstick handle.

If a low oil Driver Information Center (DIC) message displays, check the oil level. If the oil is not low and the low oil message remains on, take the vehicle to your dealer for service.

Follow these guidelines:

- To get an accurate reading, park the vehicle on level ground. Check the engine oil level after the engine has been off for at least two hours. Checking the engine oil level on steep grades

or too soon after engine shutoff can result in incorrect readings. Accuracy improves when checking a cold engine prior to starting. Remove the dipstick and check the level.

- If unable to wait two hours, the engine must be off for at least 15 minutes if the engine is warm, or at least 30 minutes if the engine is not warm. Pull out the dipstick, wipe it with a clean paper towel or cloth, then push it back in all the way. Remove it again, keeping the tip down, and check the level.

When to Add Engine Oil

LYX 1.5L L4 Turbo Engine

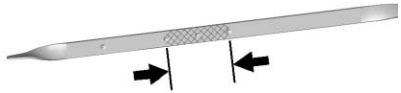

LTG 2.0L L4 Turbo Engine

LH7 1.6L L4 Diesel Engine

If the oil is below the cross-hatched area at the tip of the dipstick and the engine has been off for at least 15 minutes, add 1 L (1 qt) of the recommended oil and then recheck the level. See “Selecting the Right Engine Oil” later in this section for an explanation of what kind of oil to use. For engine oil crankcase capacity, see *Capacities and Specifications* ⇨ *366*.

Caution

Do not add too much oil. Oil levels above or below the acceptable operating range shown on the dipstick are harmful to the engine. If you find that you have an oil level above the operating range, i.e., the engine has so much oil that the oil level gets above the cross-hatched area that shows the proper operating range, the engine could be damaged. You should drain out the excess oil or limit driving of the vehicle and seek a service professional to remove the excess amount of oil.

See *Engine Compartment Overview* ⇨ *264* for the location of the engine oil fill cap.

Add enough oil to put the level somewhere in the proper operating range. Push the dipstick all the way back in when through.

Selecting the Right Engine Oil (Gasoline Engines)

Selecting the right engine oil depends on both the proper oil specification and viscosity grade. See *Recommended Fluids and Lubricants* ⇨ *361*.

Specification

Ask for and use engine oils that meet the dexos1 specification.

Engine oils that have been approved by GM as meeting the dexos1 specification are marked with the dexos1 approved logo. See www.gmdexos.com.

Caution

Failure to use the recommended engine oil or equivalent can result in engine damage not covered by the vehicle warranty.

Viscosity Grade

For the LYX 1.5L turbo engine, use:

- dexos1 approved ACDelco Full Synthetic 0W20 engine oil.
- dexos1 approved Mobil 1 Full Synthetic 0W20 engine oil.
- Or any other 0W20 engine oil meeting dexos1 second generation requirements.

Use SAE 5W-30 viscosity grade engine oil for the LTG 2.0L turbo engine. Cold Temperature Operation: In an area of extreme cold, where the temperature falls below −29 °C (−20 °F), an SAE 0W-30 oil may be used. An oil of this viscosity grade will provide easier cold starting for the engine at extremely low temperatures.

When selecting an oil of the appropriate viscosity grade, it is recommended to select an oil of the correct specification. See “Specification” earlier in this section.

Selecting the Right Engine Oil (Diesel Engines)

Selecting the right engine oil depends on both the proper oil specification and viscosity grade:

Specification

Ask for and use engine oils that meet the dexos2 specification. Engine oils that have been approved by GM as meeting the dexos2 specification are marked with the dexos2 approved logo. See www.gmdexos.com.

Use of Substitute Engine Oils if dexos2 is unavailable: In the event that dexos2-approved engine oil is not available at an oil change or for maintaining proper oil level, you may use substitute engine oil that meets ACEA C3 of the appropriate viscosity grade.

Caution

Use only engine oil that is approved to the dexos2 specification or equivalent engine oil as defined in the preceding paragraph. Failure to use the recommended engine oil can result in engine damage not covered by the vehicle warranty.

Viscosity Grade

Use SAE 5W-30 viscosity grade engine oil.

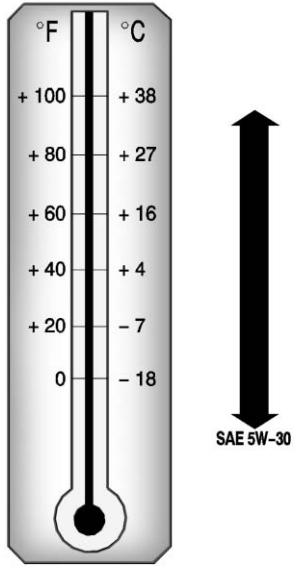

Cold Temperature Operation: In an area of extreme cold, where the temperature falls below −29 °C (−20 °F), an SAE 0W-40 oil may be used. An oil of this viscosity grade will provide easier cold starting for the engine at extremely low temperatures. When selecting an oil of the appropriate viscosity grade, it is recommended to select an oil of the correct specification. See “Specification” earlier in this section.

Engine Oil Additives/Engine Oil Flushes

Do not add anything to the oil. The recommended oils meeting the dexos specification are all that is needed for good performance and engine protection.

Engine oil system flushes are not recommended and could cause engine damage not covered by the vehicle warranty.

What to Do with Used Oil

Used engine oil contains certain elements that can be unhealthy for your skin and could even cause cancer. Do not let used oil stay on your skin for very long. Clean your skin and nails with soap and water, or a good hand cleaner. Wash or properly dispose of clothing or rags

containing used engine oil. See the manufacturer's warnings about the use and disposal of oil products.

Used oil can be a threat to the environment. If you change your own oil, be sure to drain all the oil from the filter before disposal. Never dispose of oil by putting it in the trash or pouring it on the ground, into sewers, or into streams or bodies of water. Recycle it by taking it to a place that collects used oil.

Engine Oil Life System

When to Change Engine Oil

This vehicle has a computer system that indicates when to change the engine oil and filter. This is based on a combination of factors which include engine revolutions, engine temperature, and miles driven. Based on driving conditions, the mileage at which an oil change is indicated can vary considerably. For the oil life system to work properly, the system must be reset every time the oil is changed.

When the system has calculated that oil life has been diminished, it indicates that an oil change is necessary. A CHANGE ENGINE OIL SOON message comes on. Change the oil as soon as possible within the next 1 000 km (600 mi). It is possible that, if driving under the best conditions, the oil life system may indicate that an oil change is not necessary for up to a year. The engine oil and filter must be changed at least once a year and, at this time, the system must be reset. Your dealer has trained service people who will perform this work and reset the system. It is also important to check the oil regularly over the course of an oil drain interval and keep it at the proper level.

If the system is ever reset accidentally, the oil must be changed at 5 000 km (3,000 mi) since the last oil change. Remember to reset the oil life system whenever the oil is changed.

How to Reset the Engine Oil Life System

Reset the system whenever the engine oil is changed so that the system can calculate the next engine oil change. To reset the system:

1. Display REMAINING OIL LIFE on the DIC menu. See *Driver Information Center (DIC)* ⇨ *136*.
2. Press and hold ✓ for several seconds while the Oil Life display is active to reset the Oil Life system.
3. REMAINING OIL LIFE 100% will be displayed when the oil life system is successfully reset.

The oil life system can also be reset as follows:

1. Place the ignition in Service Mode. See *Ignition Positions* ⇨ *186*.
2. Display REMAINING OIL LIFE on the DIC menu. See *Driver Information Center (DIC)* ⇨ *136*.

3. Fully press and release the accelerator pedal three times within five seconds.
4. If the display changes to 100%, the system is reset.

If the CHANGE ENGINE OIL SOON message comes back on when the vehicle is started, the engine oil life system has not reset. Repeat the procedure.

Automatic Transmission Fluid

How to Check Automatic Transmission Fluid

It is not necessary to check the transmission fluid level.
A transmission fluid leak is the only reason for fluid loss. If a leak occurs, take the vehicle to your dealer and have it repaired as soon as possible.

There is a special procedure for checking and changing the transmission fluid. Because this procedure is difficult, this should be done at your dealer. Contact your dealer for additional information or the procedure can be found in the service manual. To purchase a service manual, see *Service Publications Ordering Information* ⇨ *378*.

Change the fluid at the intervals listed in *Maintenance Schedule* ⇨ *353*, and be sure to use the fluid listed in *Recommended Fluids and Lubricants* ⇨ *361*.

Engine Air Cleaner/Filter

The engine air cleaner/filter is in the engine compartment on the passenger side of the vehicle. See *Engine Compartment Overview* ⇨ *264*.

When to Inspect the Engine Air Cleaner/Filter

For intervals on changing and inspecting the engine air cleaner/filter, see *Maintenance Schedule* ⇨ *353*.

How to Inspect the Engine Air Cleaner/Filter

Do not start the engine or have the engine running with the engine air cleaner/filter housing open. Before removing the engine air cleaner/filter, make sure that the engine air cleaner/filter housing and nearby components are free of dirt and debris. Remove the engine air cleaner/filter. Lightly tap and shake the engine air cleaner/filter (away from the vehicle), to release loose dust and dirt. Inspect the engine air cleaner/filter for damage, and replace if damaged. Do not clean the engine air cleaner/filter or components with water or compressed air.

To inspect or replace the engine air cleaner/filter:

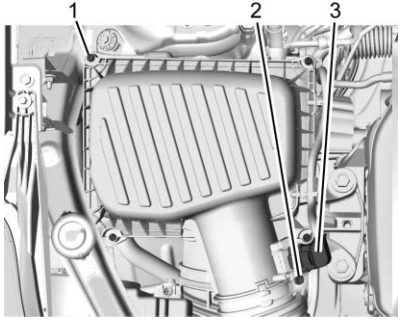

1.5L Gas Engine Shown, 1.6L Diesel Engine and 2.0L Gas Engine Similar

1. Screws
2. Air Duct Clamp
3. Electrical Connector

1. Open the hood. See *Hood* ⇨ *262*.
2. Loosen the screw on the air duct clamp (2) and remove the air duct hose from the cover.
3. Remove the four screws (1) and remove the air cleaner/filter cover, keeping the wiring harness electrical connector (3) connected to the sensor.
4. Pull straight up on the cover, and while holding the cover, remove the air cleaner/filter.
5. Inspect or replace the air cleaner/filter.

How to Reinstall the Engine Air Cleaner/Filter

1. Align the air cleaner/filter with the indicated point on the base of the air cleaner/filter housing and install the air cleaner/filter. The outer air cleaner/filter seal must be fitted properly in the air cleaner/filter housing.
2. Align the air cleaner/filter housing cover tabs to the air cleaner/filter housing.
3. Install the air cleaner/filter housing cover using the four screws.
4. Slide the air duct onto the cover assembly and tighten the screw on the air duct clamp.
5. Verify that the wiring harness connector is fully connected to the sensor on the air cleaner/filter housing.

⚠ Warning

Operating the engine with the air cleaner/filter off can cause you or others to be burned. The air cleaner not only cleans the air; it helps to stop flames if the engine

(Continued)

Warning (Continued)

backfires. Use caution when working on the engine and do not drive with the air cleaner/filter off.

Caution

If the air cleaner/filter is off, dirt can easily get into the engine, which could damage it. Always have the air cleaner/filter in place when driving.

Cooling System

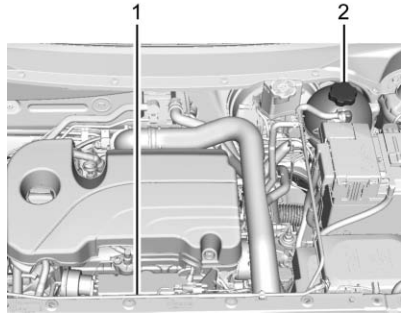

1.5L Gas Engine

1. Engine Cooling Fan (Out of View)
2. Engine Coolant Surge Tank and Pressure Cap

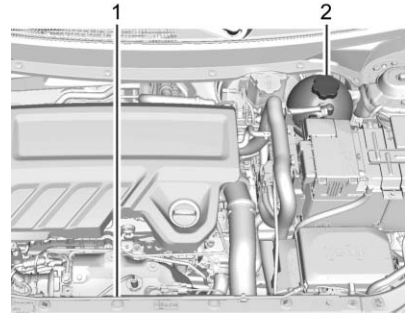

1.6L Diesel Engine

1. Engine Cooling Fan (Out of View)
2. Engine Coolant Surge Tank and Pressure Cap

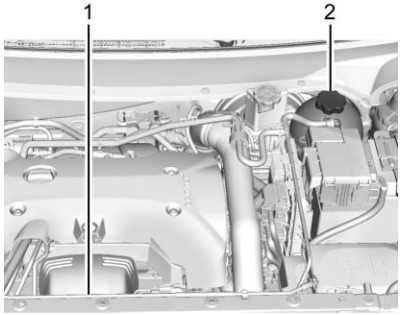

2.0L Gas Engine

1. Engine Cooling Fans (Out of View)
2. Engine Coolant Surge Tank and Pressure Cap

⚠ Warning

An underhood electric fan can start up even when the engine is not running and can cause injury. Keep hands, clothing, and tools away from any underhood electric fan.

⚠ Warning

Do not touch heater or radiator hoses, or other engine parts. They can be very hot and can burn you. Do not run the engine if there is a leak; all coolant could leak out. That could cause an engine fire and can burn you. Fix any leak before driving the vehicle.

If the coolant inside the coolant surge tank is boiling, do not do anything else until it cools down. The vehicle should be parked on a level surface.

The coolant level should be at the top rib on the middle of the tank. If it is not, the vehicle may have a leak at the radiator hoses, heater hoses, radiator, water pump, or somewhere else in the cooling system.

If there seems to be no leak, with the engine on, check to see if the electric engine cooling fan is running. If the engine is overheating, the fan should be running. If it is not, the vehicle needs service. Turn off the engine.

Engine Coolant

The engine cooling system in the vehicle is filled with DEX-COOL engine coolant mixture. This coolant needs to be checked and changed at appropriate levels.
See *Recommended Fluids and Lubricants* ⇨ *361* and *Maintenance Schedule* ⇨ *353*.

The following explains the cooling system and how to check and add coolant when it is low. If there is a problem with engine overheating, see *Engine Overheating* ⇨ *280*.

What to Use

⚠ Warning

Plain water, or other liquids such as alcohol, can boil before the proper coolant mixture will. With plain water or the wrong mixture, the engine could get too hot but

(Continued)

Warning (Continued)

there would not be an overheat warning. The engine could catch fire and you or others could be burned.

Use a 50/50 mixture of clean, drinkable water and DEX-COOL coolant. If using this mixture, nothing else needs to be added. This mixture:

- Gives freezing protection down to −37 °C (−34 °F), outside temperature.
- Gives boiling protection up to 129 °C (265 °F), engine temperature.
- Protects against rust and corrosion.
- Will not damage aluminum parts.
- Helps keep the proper engine temperature.

Caution

Do not use anything other than a mix of DEX-COOL coolant that meets GM Standard GMW3420 and clean, drinkable water. Anything else can cause damage to the engine cooling system and the vehicle, which would not be covered by the vehicle warranty.

Never dispose of engine coolant by putting it in the trash, pouring it on the ground, or pouring into sewers, streams, or bodies of water. Have the coolant changed by an authorized service center, familiar with legal requirements regarding used coolant disposal. This will help protect the environment and your health.

Checking Coolant

The vehicle must be on a level surface when checking the coolant level.

Check to see if coolant is visible in the coolant surge tank. If the coolant inside the coolant surge tank is boiling, do not do anything else until it cools down. If coolant is visible but the coolant level mark is not visible, add a 50/50 mixture of clean, drinkable water and DEX-COOL coolant at the coolant surge tank to the top rib on the middle of the tank, but be sure the cooling system is cool before this is done. See *Engine Overheating* ⇨ *280*.

The coolant surge tank is located in the engine compartment on the driver side of the vehicle. See *Engine Compartment Overview* ⇨ *264*.

How to Add Coolant to the Coolant Surge Tank

⚠ Warning

Steam and scalding liquids from a hot cooling system are under pressure. Turning the pressure cap, even a little, can cause them to come out at high speed and you could be burned. Never turn the cap when the cooling system, including the pressure cap, is hot. Wait for the cooling system and pressure cap to cool.

⚠ Warning

Plain water, or other liquids such as alcohol, can boil before the proper coolant mixture will. With plain water or the wrong mixture, the engine could get too hot but there would not be an overheat warning. The engine could catch fire and you or others could be burned.

⚠ Warning

Spilling coolant on hot engine parts can burn you. Coolant contains ethylene glycol and it will burn if the engine parts are hot enough.

Caution

Failure to follow the specific coolant fill procedure could cause the engine to overheat and could cause system damage. If coolant is not visible in the surge tank, contact your dealer.

1. Remove the coolant surge tank pressure cap when the cooling system, including the coolant surge tank pressure cap and upper radiator hose, is no longer hot.

   Turn the pressure cap slowly counterclockwise about one-quarter of a turn. If you hear a hiss, wait for that to

stop. This will allow any pressure still left to be vented out the discharge hose.

2. Keep turning the pressure cap slowly and remove it.

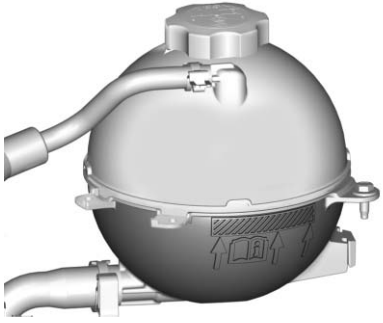

3. Fill the coolant surge tank with the proper mixture to the indicated level mark.
4. With the coolant surge tank pressure cap off, start the engine and let it run until you can feel the upper radiator hose getting hot. Watch out for the engine cooling fans.

   By this time, the coolant level inside the coolant surge tank may be lower. If the level is lower, add more of the proper mixture to the coolant surge tank until the level reaches the indicated level mark.
5. Replace the pressure cap tightly.
6. Verify coolant level after the engine is shut off and the coolant is cold. If necessary, repeat coolant fill procedure Steps 1–6.

   If the coolant still is not at the proper level when the system cools down again, see your dealer.

Caution
If the pressure cap is not tightly installed, coolant loss and engine damage may occur. Be sure the cap is properly and tightly secured.

Engine Overheating

The vehicle has an engine coolant temperature gauge on the instrument cluster and overheat messages in the Driver Information Center (DIC) to warn of engine overheating. See *Engine Coolant Temperature Gauge* ⇨ *124*.

The decision may be made not to lift the hood when the engine coolant temperature gauge is in the overheat zone or an engine overheat DIC message displays, but instead to get service help right away. See *Roadside Assistance Program* ⇨ *373*.

If the decision to lift the hood is made, make sure the vehicle is parked on a level surface. Then check to see if the engine cooling fan(s) are running. If the engine is overheating, the fan(s) should be running. If they are not, do not continue to run the engine, and have the vehicle serviced.

Caution

Do not run the engine if there is a leak in the engine cooling system. This can cause a loss of all coolant and can damage the system and vehicle. Have any leaks fixed right away.

If Steam Is Coming from the Engine Compartment

⚠ Warning

Steam and scalding liquids from a hot cooling system are under pressure. Turning the pressure cap, even a little, can cause them to come out at high speed and you could be burned. Never turn the cap when the cooling system, including the pressure cap, is hot. Wait for the cooling system and pressure cap to cool.

If No Steam Is Coming from the Engine Compartment

If the engine coolant temperature gauge is in the overheat zone or an engine overheat DIC message is displayed but no steam can be seen or heard, the problem may not be too serious. Sometimes the engine can get a little too hot when the vehicle:

- Climbs a long hill on a hot day
- Stops after high-speed driving
- Idles for long periods in traffic
- Tows a trailer

If the engine coolant temperature gauge is in the overheat zone and an overheat DIC message is displayed with no sign of steam:

1. Turn the air conditioning off.
2. Turn the heater on to the highest temperature and to the highest fan speed. Open the windows as necessary.
3. When it is safe to do so, pull off the road, shift to P (Park) or N (Neutral), and let the engine idle.

If the engine coolant temperature gauge is no longer in the overheat zone or an overheat DIC message no longer displays, the vehicle can be driven. Continue to drive the vehicle slowly for about 10 minutes. Keep a safe distance from the vehicle in front. If the engine coolant temperature gauge does not go back to the overheat zone or an overheat DIC message does not display, continue to drive normally and have the cooling system checked for proper fill and function.

If the engine coolant temperature gauge is still in the overheat zone or an overheat DIC message still displays, pull over, stop, and park the vehicle right away. If overheat messages appear repeatedly, see your dealer.

If there is no sign of steam, idle the engine for three minutes while parked. If the engine coolant temperature gauge is still in the

overheat zone or an overheat DIC message displays, turn off the engine until it cools down.

Washer Fluid

What to Use

When windshield washer fluid is needed, be sure to read the manufacturer's instructions before use. If operating the vehicle in an area where the temperature may fall below freezing, use a fluid that has sufficient protection against freezing.

Adding Washer Fluid

Open the cap with the washer symbol on it. Add washer fluid until the tank is full. See *Engine Compartment Overview* ⇨ *264* for reservoir location.

Caution

- Do not use washer fluid that contains any type of water repellent coating. This can cause the wiper blades to chatter or skip.
- Do not use engine coolant (antifreeze) in the windshield washer. It can damage the windshield washer system and paint.
- Do not mix water with ready-to-use washer fluid. Water can cause the solution to freeze and damage the washer fluid tank and other parts of the washer system.
- When using concentrated washer fluid, follow the manufacturer instructions for adding water.
- Fill the washer fluid tank only three-quarters full when it is very cold. This allows

(Continued)

Caution (Continued)

for fluid expansion if freezing occurs, which could damage the tank if it is completely full.

Brakes

Disc brake pads have built-in wear indicators that make a high-pitched warning sound when the brake pads are worn and new pads are needed. The sound can come and go or can be heard all the time when the vehicle is moving, except when applying the brake pedal firmly.

⚠ Warning

The brake wear warning sound means that soon the brakes will not work well. That could lead to a crash. When the brake wear warning sound is heard, have the vehicle serviced.

Caution

Continuing to drive with worn-out brake pads could result in costly brake repair.

Some driving conditions or climates can cause a brake squeal when the brakes are first applied or lightly applied. This does not mean something is wrong with the brakes.

Properly torqued wheel nuts are necessary to help prevent brake pulsation. When tires are rotated, inspect brake pads for wear and evenly tighten wheel nuts in the proper sequence to torque specifications. See *Capacities and Specifications* ⇨ *366*.

Brake pads should be replaced as complete sets.

Brake Pedal Travel

See your dealer if the brake pedal does not return to normal height, or if there is a rapid increase in pedal travel. This could be a sign that brake service may be required.

Replacing Brake System Parts

Always replace brake system parts with new, approved replacement parts. If this is not done, the brakes may not work properly. The braking performance expected can change in many other ways if the wrong replacement brake parts are installed or if parts are improperly installed.

Brake Fluid

The brake master cylinder reservoir is filled with GM approved DOT 3 brake fluid as indicated on the reservoir cap. See *Engine Compartment Overview* ⇨ *264* for the location of the reservoir.

Checking Brake Fluid

With the vehicle in P (Park) on a level surface, the brake fluid level should be between the minimum and maximum marks on the brake fluid reservoir.

There are only two reasons why the brake fluid level in the reservoir may go down:

- Normal brake lining wear. When new linings are installed, the fluid level goes back up.
- A fluid leak in the brake hydraulic system. Have the brake hydraulic system fixed. With a leak, the brakes will not work well.

Always clean the brake fluid reservoir cap and the area around the cap before removing it.

Do not top off the brake fluid. Adding fluid does not correct a leak. If fluid is added when the linings are worn, there will be too much fluid when new brake linings are

installed. Add or remove fluid, as necessary, only when work is done on the brake hydraulic system.

⚠ Warning

If too much brake fluid is added, it can spill on the engine and burn, if the engine is hot enough. You or others could be burned, and the vehicle could be damaged. Add brake fluid only when work is done on the brake hydraulic system.

When the brake fluid falls to a low level, the brake warning light comes on. See *Brake System Warning Light* ⇨ *129*.

Brake fluid absorbs water over time which degrades the effectiveness of the brake fluid. Replace brake fluid at the specified intervals to prevent increased stopping distance. See *Maintenance Schedule* ⇨ *353*.

What to Add

Use only GM approved DOT 3 brake fluid from a clean, sealed container. See *Recommended Fluids and Lubricants* ⇨ *361*.

⚠ Warning

The wrong or contaminated brake fluid could result in damage to the brake system. This could result in the loss of braking leading to a possible injury. Always use the proper GM approved brake fluid.

Caution

If brake fluid is spilled on the vehicle's painted surfaces, the paint finish can be damaged. Immediately wash off any painted surface.

Battery - North America

The original equipment battery is maintenance free. Do not remove the cap and do not add fluid.

Refer to the replacement number shown on the original battery label when a new battery is needed. See *Engine Compartment Overview* ⇨ *264* for battery location.

The vehicle has an Absorbing Glass Mat (AGM) 12-volt battery. Installation of a standard 12-volt battery will result in reduced 12-volt battery life. When using a 12-volt battery charger on the 12-volt AGM battery, some chargers have an AGM battery setting on the charger. If available, use the AGM setting on the charger, to limit charge voltage to 14.8 volts. Follow the charger manufacturer's instructions.

⚠ Warning

WARNING: Battery posts, terminals, and related accessories contain lead and lead

(Continued)

Warning (Continued)

compounds, chemicals known to the State of California to cause cancer and birth defects or other reproductive harm. Batteries also contain other chemicals known to the State of California to cause cancer. **WASH HANDS AFTER HANDLING.** For more information go to www.P65Warnings.ca.gov/passenger-vehicle.

See *California Proposition 65 Warning* ⇨ *260* and the back cover.

Vehicle Storage

⚠ Warning

Batteries have acid that can burn you and gas that can explode. You can be badly hurt if you are not careful. See *Jump Starting - North America* ⇨ *335* for tips on working around a battery without getting hurt.

Infrequent Usage: Remove the black, negative (−) cable from the battery to keep the battery from running down.

Extended Storage: Remove the black, negative (−) cable from the battery or use a battery trickle charger.

All-Wheel Drive

Transfer Case

Under normal driving conditions, transfer case fluid does not require maintenance unless there is a fluid leak or unusual noise. If required, have the transfer case serviced by your dealer.

Starter Switch Check

⚠ Warning

When you are doing this inspection, the vehicle could move suddenly. If the vehicle moves, you or others could be injured.

1. Before starting this check, be sure there is enough room around the vehicle.
2. Apply both the parking brake and the regular brake.

   Do not use the accelerator pedal, and be ready to turn off the engine immediately if it starts.
3. Try to start the engine in each gear. The vehicle should start only in P (Park) or N (Neutral). If the vehicle starts in any other position, contact your dealer for service.

Park Brake and P (Park) Mechanism Check

⚠ Warning

When you are doing this check, the vehicle could begin to move. You or others could be injured and property could be damaged. Make sure there is room in front of the vehicle in case it begins to roll. Be ready to apply the regular brake at once should the vehicle begin to move.

Park on a fairly steep hill, with the vehicle facing downhill. Keeping your foot on the regular brake, set the parking brake.

- To check the parking brake's holding ability: With the engine running and the transmission in N (Neutral), slowly remove foot pressure from the regular brake pedal. Do this until the vehicle is held by the parking brake only.
- To check the P (Park) mechanism's holding ability: With the engine running, shift to P (Park). Then release the parking brake followed by the regular brake.

Contact your dealer if service is required.

Wiper Blade Replacement

Windshield wiper blades should be inspected for wear and cracking. See *Maintenance Schedule* ⇨ *353*.

Replacement blades come in different types and are removed in different ways. For proper type and length, see *Maintenance Replacement Parts* ⇨ *362*.

Caution

Allowing the wiper arm to touch the windshield when no wiper blade is installed could damage the windshield. Any damage that occurs would not be covered by

(Continued)

Caution (Continued)

the vehicle warranty. Do not allow the wiper arm to touch the windshield.

Front Wiper Blade Replacement

To replace the wiper blade:

1. Pull the wiper assembly away from the windshield.

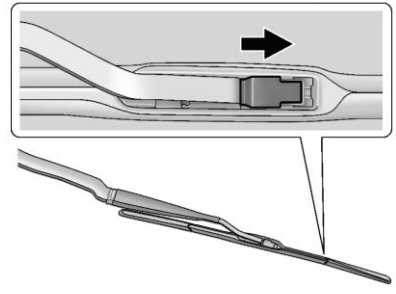

2. Lift up on the latch in the middle of the wiper blade where the wiper arm attaches.

3. With the latch open, pull the wiper blade down toward the windshield far enough to release it from the J-hooked end of the wiper arm.
4. Remove the wiper blade.
5. Reverse Steps 1–3 for wiper blade replacement.

Rear Wiper Blade Replacement

The rear wiper blade and wiper arm have a cover for protection.

To remove the cover:

1. Slide a plastic tool under the cover and push upward to unsnap.
2. Slide the cover toward the wiper blade tip to unhook it from the blade assembly.
3. Remove the cover.
4. After wiper blade replacement, ensure that the cover hook slides into the slot in the blade assembly.
5. Snap the cover down to secure.

To replace the wiper blade:

1. Lift the wiper arm away from the windshield.

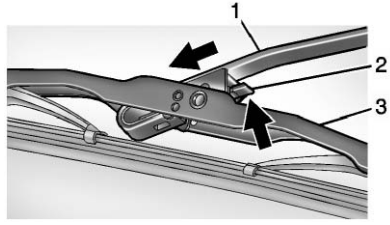

2. Push the release lever (2) to disengage the hook and push the wiper arm (1) out of the blade assembly (3).
3. Push the new blade assembly securely on the wiper arm until the release lever clicks into place.

Windshield Replacement

Driver Assistance Systems

If the windshield needs to be replaced and the vehicle is equipped with a front camera sensor for the Driver Assistance Systems, a GM replacement windshield is recommended. The replacement windshield must be installed according to GM specifications for proper alignment. If it is not, these systems may not work properly, they may display messages, or they may not work at all. See your dealer for proper windshield replacement.

Gas Strut(s)

This vehicle is equipped with gas strut(s) to provide assistance in lifting and holding open the hood/trunk/liftgate system in full open position.

⚠ Warning

If the gas struts that hold open the hood, trunk, and/or liftgate fail, you or others could be seriously injured. Take the vehicle to your dealer for service immediately. Visually inspect the gas struts for signs of wear, cracks, or other damage periodically. Check to make sure the hood/trunk/liftgate is held open with enough force. If struts are failing to hold the hood/trunk/liftgate, do not operate. Have the vehicle serviced.

Caution

Do not apply tape or hang any objects from gas struts. Also do not push down or pull on gas struts. This may cause damage to the vehicle.

See *Maintenance Schedule* ⇨ *353*.

Hood

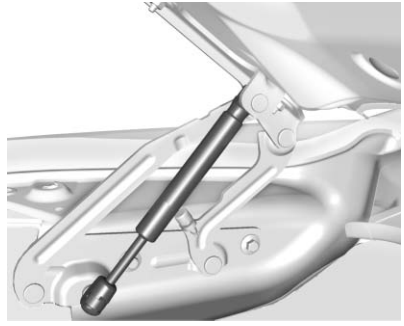

Trunk

Liftgate

Headlamp Aiming

Headlamp aim has been preset and should need no further adjustment.

If the vehicle is damaged in a crash, the headlamp aim may be affected. If adjustment to the headlamps is necessary, see your dealer.

Bulb Replacement

For the proper type of replacement bulbs, or any bulb changing procedure not listed in this section, contact your dealer.

Halogen Bulbs

⚠ Warning

Halogen bulbs have pressurized gas inside and can burst if you drop or scratch the bulb. You or others could be injured. Be sure to read and follow the instructions on the bulb package.

High Intensity Discharge (HID) Lighting

⚠ Warning

The High Intensity Discharge (HID) lighting system operates at a very high voltage. If you try to

(Continued)

Warning (Continued)

service any of the system components, you could be seriously injured. Have your dealer or a qualified technician service them.

After an HID headlamp bulb has been replaced, the beam might be a slightly different shade than it was originally. This is normal.

LED Lighting

This vehicle has several LED lamps. For replacement of any LED lighting assembly, contact your dealer.

Front Turn Signal Lamps

To replace one of these bulbs:

1. Open the hood. See *Hood* ⇨ *262*.

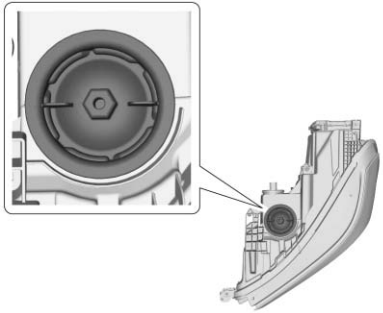

2. Remove the bulb access cap from the top of the headlamp assembly by turning it counterclockwise.

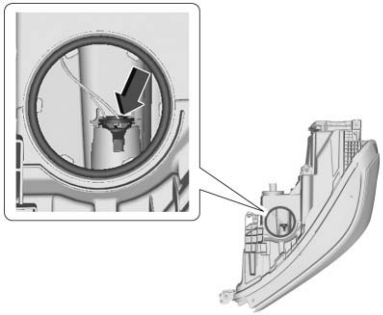

3. Remove the bulb from the bulb socket by pinching the tabs on either side of the bulb and pull straight out.
4. Install the new bulb in the bulb socket.
5. Install the bulb access cap onto the headlamp assembly by turning clockwise.

Taillamps

To replace one of these lamps:

1. Open the liftgate. See *Liftgate* ⇨ *41*.

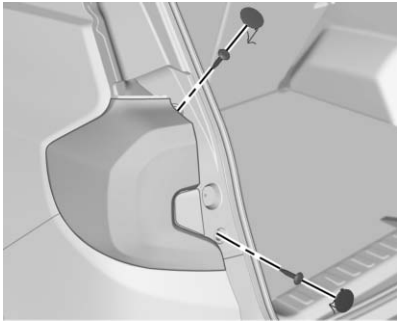

2. Remove the two screw caps and two screws from the taillamp assembly.
3. Pull the taillamp assembly out of the vehicle body.
4. Disconnect the lamp wiring harness.

5. Turn the bulb socket counterclockwise and pull it out.
6. Pull the bulb straight out of the socket.
7. Push the replacement bulb straight into the bulb socket.

8. Push the bulb socket in and turn it clockwise.
9. Reverse steps 2–5 to reinstall the lamp assembly.

License Plate Lamp

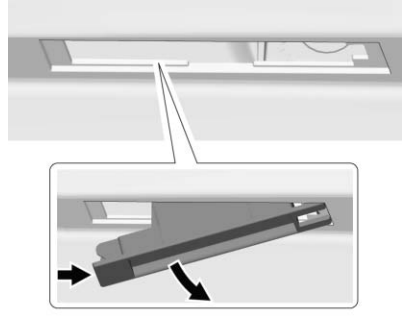

Lamp Assembly

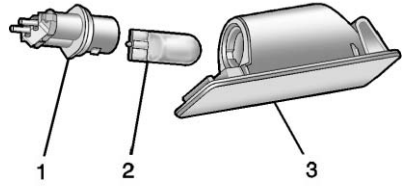

Bulb Assembly

1. Bulb Socket
2. Bulb
3. Lamp Assembly

To replace one of these bulbs:

1. Open the liftgate partway. See *Liftgate* ⇨ *41*.
2. Push the lamp assembly outboard to remove.
3. Pull the lamp assembly down to remove it from the liftgate.
4. Turn the bulb socket (1) counterclockwise to remove it from the lamp assembly (3).
5. Pull the bulb (2) straight out of the bulb socket (1).
6. Push the replacement bulb straight into the bulb socket and turn the bulb socket clockwise to install it into the lamp assembly.
7. Push the lamp assembly into the liftgate engaging the clip side first.
8. Push on the lamp side opposite the clip until the lamp assembly snaps into place.

Electrical System

Electrical System Overload

The vehicle has fuses and circuit breakers to protect against an electrical system overload.

When the electrical load current is too heavy, the circuit breaker opens and closes, protecting the circuit until the current load returns to normal or the problem is fixed. This greatly reduces the chance of circuit overload and fire caused by electrical problems.

Replace a bad fuse with a new one of the identical size and rating.

If there is a problem on the road and a fuse needs to be replaced, the same amperage fuse can be borrowed. Choose some feature of the vehicle that is not needed to use and replace it as soon as possible.

Headlamp Wiring

An electrical overload may cause the lamps to go on and off, or in some cases to remain off. Have the headlamp wiring checked right away if the lamps go on and off or remain off.

Windshield Wipers

If the wiper motor overheats due to heavy snow or ice, the windshield wipers will stop until the motor cools and will then restart.

Although the circuit is protected from electrical overload, overload due to heavy snow or ice may cause wiper linkage damage. Always clear ice and heavy snow from the windshield before using the windshield wipers.

If the overload is caused by an electrical problem and not snow or ice, be sure to get it fixed.

Fuses and Circuit Breakers

The wiring circuits in the vehicle are protected from short circuits by a combination of fuses and circuit breakers. This greatly reduces the chance of damage caused by electrical problems.

⚠ Danger

Fuses and circuit breakers are marked with their ampere rating. Do not exceed the specified amperage rating when replacing fuses and circuit breakers. Use of an oversized fuse or circuit breaker can result in a vehicle fire. You and others could be seriously injured or killed.

To check a fuse, look at the silver-colored band inside the fuse. If the band is broken or melted, replace the fuse. Be sure to replace a bad fuse with a new one of the identical size and rating.

Fuses of the same amperage can be temporarily borrowed from another fuse location, if a fuse goes out. Replace the fuse as soon as possible.

There is a fuse puller in the engine compartment fuse block. See *Engine Compartment Fuse Block* ⇨ *293*. It can be used to easily remove fuses from the fuse block.

To identify and check fuses, circuit breakers, and relays see *Engine Compartment Fuse Block* ⇨ *293*,*Instrument Panel Fuse Block* ⇨ *296* and *Rear Compartment Fuse Block* ⇨ *298*.

Engine Compartment Fuse Block

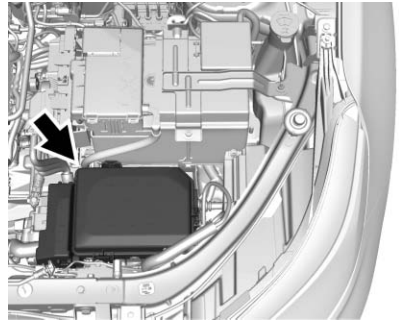

To remove the fuse block cover, squeeze the clips on the cover and lift it straight up. See *Engine Compartment Overview* ⇨ *264*.

Caution

Spilling liquid on any electrical component on the vehicle may damage it. Always keep the covers on any electrical component.

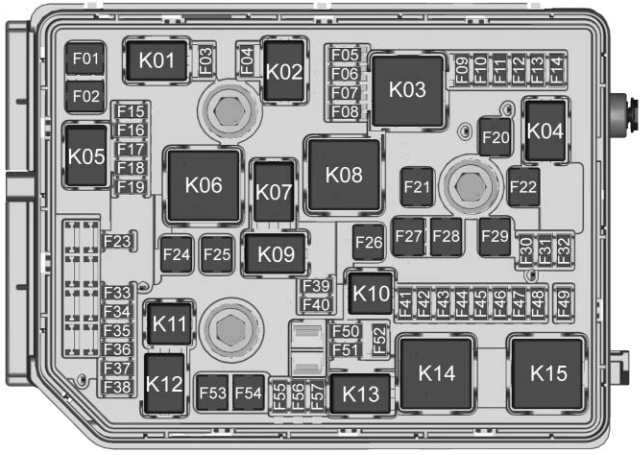

The vehicle may not be equipped with all of the fuses, relays, and features shown.

Fuses	Usage
F01	Starter 1
F02	Starter 2
F03	Lambda sensor 1
F04	Engine control module
F05	FlexFuel sensor
F06	Transmission control module
F07	–
F08	Engine control module
F09	Air conditioning clutch
F10	Canister vent
F11	Fuel system
F12	Front heated seats
F13	Afterboil pump
F14	–
F15	Lambda sensor 2
F16	Fuel injectors – odd
F17	Fuel injectors – even
F18	–/Selective catalytic reduction module (diesel only)
F19	–/NOx soot sensor (diesel only)
F20	DC DC converter 2
F21	Shift control
F22	Antilock brake pump
F23	Front washer
F24	–
F25	–/Diesel fuel heater (diesel only)
F26	–

Fuses	Usage
F27	Antilock brake VAL
F28	LD trailer
F29	Rear window defogger
F30	Mirror defroster
F31	–
F32	Variable functions
F33	–
F34	Horn
F35	Vacuum pump
F36	Right high-beam headlamp
F37	Left high-beam headlamp
F38	Automatic headlamp leveling
F39	Fog lamps
F40	–
F41	Transmission range control module
F42	Motorized headlamp

Fuses	Usage
F43	Fuel pump
F44	Interior rearview mirror
F45	Canister vent solenoid
F46	Driver side Ventilated Seat
F47	Steering column lock assembly
F48	Rear wiper
F49	–
F50	Heated steering wheel
F51	Right headlamp
F52	Engine control module/ Transmission control
F53	–
F54	Front wiper
F55	Front wiper speed/ Control
F56	–

Fuses	Usage
F57	Left headlamp

Relays	Usage
K01	Starter solenoid
K02	Air conditioning control
K03	–
K04	Wiper control
K05	Starter Solenoid
K06	–/Fuel heater (diesel only)
K07	–
K08	–
K09	Wiper speed
K10	–
K11	–
K12	High-beam headlamps
K13	Headlamps/Daytime running lamps
K14	Run/Crank

Relays	Usage
K15	Rear window defogger
*K16	Horn
*K17	Selective catalytic reduction
*K18	Fog lamps
*K19	Coolant pump
*K20	–
*K21	Rear washer
*K22	Front washer
*K23	Wiper control

* PCB relays are not serviceable.

Instrument Panel Fuse Block

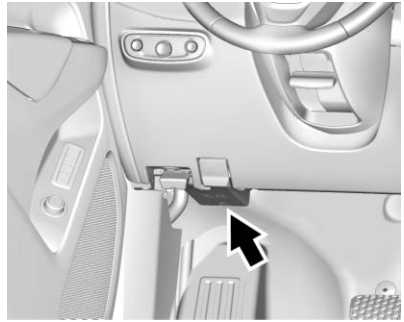

The instrument panel fuse block is under the instrument panel on the driver side.

To access the fuses, press and release the latch near the top center square.

Apply pressure to the two retaining tabs on the sides of the cover, until the two retaining tabs clear the sides of the instrument panel. Allow the panel to move downward and out of the way.

To reinstall the cover, reverse the steps.

The vehicle may not be equipped with all of the fuses and relays shown.

Fuses	Usage
F01	DC AC inverter
F02	Front windows
F03	Trailer brake
F04	Heating, ventilation, and air conditioning blower
F05	Body control module 2
F06	CGM
F07	–
F08	Body control module 3
F09	Amplifier
F10	–
F11	–
F12	–
F13	–
F14	Electronic shifter
F15	Transmission control module
F16	Front heated seats
F17	Left data link connector
F18	Body control module 7
F19	Exterior mirror
F20	Body control module 1
F21	Body control module 4
F22	Body control module 6
F23	Electric steering column lock
F24	Sensing and diagnostic module
F25	Occupancy sensor
F26	–
F27	Power seats
F28	Rear windows
F29	–
F30	Front heated seats switch
F31	Steering wheel controls

Fuses	Usage
F32	Body control module 8
F33	Heating, ventilation, and air conditioning
F34	Passive entry, passive start
F35	Liftgate latch
F36	Shift charger
F37	Cigarette lighter
F38	OnStar
F39	Instrument panel USB
F40	Camera module/ Liftgate module
F41	Parking assist module
F42	Radio

Relays	Usage
K01	Deadbolt
K02	Retained accessory power
K03	Liftgate
K04	–
K05	Logistics

Circuit Breakers	Usage
CB1	Front auxiliary power outlet
CB2	Auxiliary power outlet console

Rear Compartment Fuse Block

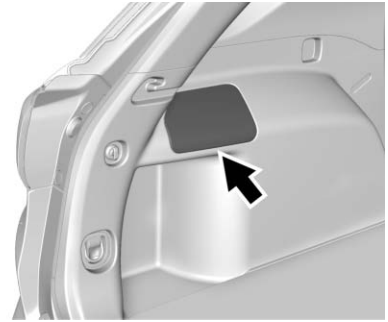

The rear compartment fuse block is behind a trim panel on the side of the rear compartment.

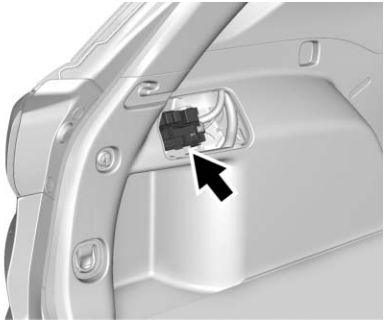

Remove the trim plate to access the fuse block.

The vehicle may not be equipped with all of the fuses and relays shown.

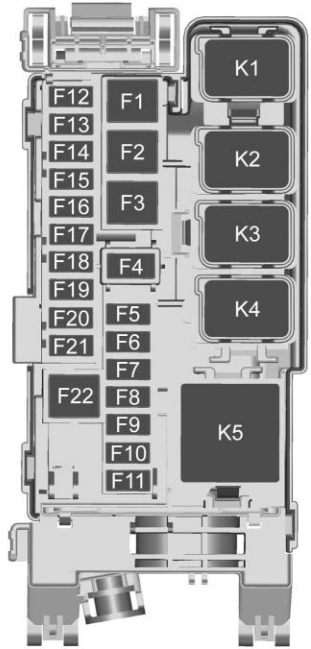

Fuses	Usage
F1	Exhaust fuel heater
F2	Liftgate
F3	Trailer auxiliary power
F4	Power seats
F5	Memory seat module
F6	Sunroof
F7	Side blind zone alert
F8	Trailer reverse lamps
F9	Rear heated seat 1
F10	Parking assist
F11	Rear heated seat 2
F12	–
F13	Trailer parking lamp
F14	Right trailer turn signal lamp
F15	Left parking lamp
F16	Right parking lamp
F17	–

Fuses	Usage
F18	Left trailer turn signal lamp
F19	All-wheel drive
F20	Lumbar
F21	Rear auxiliary power outlet
F22	Rear drive unit

Relays	Usage
K1	Right trailer stoplamp/Turn signal lamp
K2	Trailer reverse lamps
K3	Left trailer stoplamp/Turn signal lamp
K4	Park lamps
K5	Selective catalytic reduction (SCR) – (diesel only)

Wheels and Tires

Tires

Every new GM vehicle has high-quality tires made by a leading tire manufacturer. See the warranty manual for information regarding the tire warranty and where to get service. For additional information refer to the tire manufacturer.

⚠ Warning

- Poorly maintained and improperly used tires are dangerous.
- Overloading the tires can cause overheating as a result of too much flexing. There could be a blowout and a serious crash. See *Vehicle Load Limits* ⇨ *181*.

(Continued)

Warning (Continued)

- Underinflated tires pose the same danger as overloaded tires. The resulting crash could cause serious injury. Check all tires frequently to maintain the recommended pressure. Tire pressure should be checked when the tires are cold.
- Overinflated tires are more likely to be cut, punctured, or broken by a sudden impact — such as when hitting a pothole. Keep tires at the recommended pressure.
- Worn or old tires can cause a crash. If the tread is badly worn, replace them.

(Continued)

Warning (Continued)

- Replace any tires that have been damaged by impacts with potholes, curbs, etc.
- Improperly repaired tires can cause a crash. Only the dealer or an authorized tire service center should repair, replace, dismount, and mount the tires.
- Do not spin the tires in excess of 56 km/h (35 mph) on slippery surfaces such as snow, mud, ice, etc. Excessive spinning may cause the tires to explode.

All-Season Tires

This vehicle may come with all-season tires. These tires are designed to provide good overall performance on most road surfaces and weather conditions. Original equipment tires designed to GM's specific tire performance criteria have a TPC specification code molded onto the sidewall. Original equipment all-season tires can be identified by the last two characters of this TPC code, which will be “MS.”

Consider installing winter tires on the vehicle if frequent driving on snow or ice-covered roads is expected. All-season tires provide adequate performance for most winter driving conditions, but they may not offer the same level of traction or performance as winter tires on snow or ice-covered roads. See *Winter Tires* ⇨ *301*.

Winter Tires

This vehicle was not originally equipped with winter tires. Winter tires are designed for increased traction on snow and ice-covered roads. Consider installing winter tires on the vehicle if frequent driving on ice or snow covered roads is expected. See your dealer for details regarding winter tire availability and proper tire selection. Also, see *Buying New Tires* ⇨ *315*.

With winter tires, there may be decreased dry road traction, increased road noise, and shorter tread life. After changing to winter tires, be alert for changes in vehicle handling and braking.

If using winter tires:

- Use tires of the same brand and tread type on all four wheel positions.
- Use only radial ply tires of the same size, load range, and speed rating as the original equipment tires.

Winter tires with the same speed rating as the original equipment tires may not be available for H, V, W, Y, and ZR speed rated tires. If winter tires with a lower speed rating are chosen, never exceed the tire's maximum speed capability.

Summer Tires

This vehicle may come with high performance summer tires. These tires have a special tread and compound that are optimized for maximum dry and wet road performance. This special tread and compound will have decreased performance in cold climates, and on ice and snow. It is recommended that winter tires be installed on the vehicle if frequent driving at temperatures below approximately 5 °C (40 °F) or on ice or snow covered roads is expected. See *Winter Tires* ⇨ *301*.

Caution

High performance summer tires have rubber compounds that lose flexibility and may develop surface cracks in the tread area at temperatures below −7 °C (20 °F). Always store high performance summer tires indoors and at temperatures

(Continued)

Caution (Continued)

above −7 °C (20 °F) when not in use. If the tires have been subjected to −7 °C (20 °F) or less, let them warm up in a heated space to at least 5 °C (40 °F) for 24 hours or more before being installed or driving a vehicle on which they are installed. Do not apply heat or blow heated air directly on the tires. Always inspect tires before use. See *Tire Inspection* ⇨ *313*.

Tire Sidewall Labeling

Useful information about a tire is molded into its sidewall. The examples show a typical passenger vehicle tire and a compact spare tire sidewall.

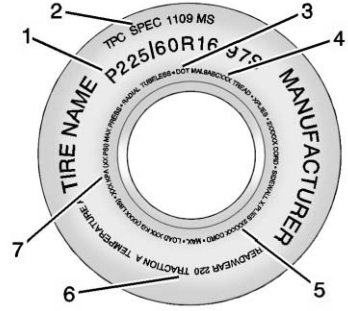

Passenger (P-Metric) Tire Example

(1) Tire Size : The tire size is a combination of letters and numbers used to define a particular tire's width, height, aspect ratio, construction type, and service description. See the “Tire Size” illustration later in this section.

(2) TPC Spec (Tire Performance Criteria Specification) : Original equipment tires designed to GM's specific tire performance criteria have a TPC specification

code molded onto the sidewall. GM's TPC specifications meet or exceed all federal safety guidelines.

(3) DOT (Department of Transportation) : The Department of Transportation (DOT) code indicates that the tire is in compliance with the U.S. Department of Transportation Motor Vehicle Safety Standards.

DOT Tire Date of Manufacture : The last four digits of the TIN indicate the tire manufactured date. The first two digits represent the week (01–52) and the last two digits, the year. For example, the third week of the year 2010 would have a four-digit DOT date of 0310.

(4) Tire Identification Number (TIN) : The letters and numbers following the DOT (Department of Transportation) code are the Tire Identification Number (TIN). The TIN shows the manufacturer and plant code, tire size, and date the tire was manufactured. The TIN is molded onto both sides of the tire, although only one side may have the date of manufacture.

(5) Tire Ply Material : The type of cord and number of plies in the sidewall and under the tread.

(6) Uniform Tire Quality Grading (UTQG) : Tire manufacturers are required to grade tires based on three performance factors: treadwear, traction, and temperature resistance. For more information see *Uniform Tire Quality Grading* ⇨ *317*.

(7) Maximum Cold Inflation Load Limit : Maximum load that can be carried and the maximum pressure needed to support that load.

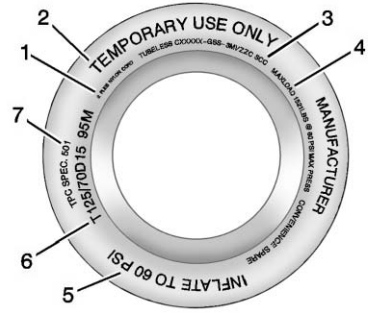

Compact Spare Tire Example

(1) Tire Ply Material : The type of cord and number of plies in the sidewall and under the tread.

(2) Temporary Use Only : The compact spare tire or temporary use tire should not be driven at speeds over 80 km/h (50 mph). The compact spare tire is for emergency use when a regular road tire has lost air and gone flat. If the vehicle has a compact spare tire, see *Compact Spare Tire* ⇨ *334* and *If a Tire Goes Flat* ⇨ *320*.

(3) Tire Identification Number (TIN) : The letters and numbers following the DOT (Department of Transportation) code are the Tire Identification Number (TIN). The TIN shows the manufacturer and plant code, tire size, and date the tire was manufactured. The TIN is molded onto both sides of the tire, although only one side may have the date of manufacture.

(4) Maximum Cold Inflation Load Limit : Maximum load that can be carried and the maximum pressure needed to support that load.

(5) Tire Inflation : The temporary use tire or compact spare tire should be inflated to 420 kPa (60 psi). For more information on tire pressure and inflation see *Tire Pressure* ⇨ *307*.

(6) Tire Size : A combination of letters and numbers define a tire's width, height, aspect ratio, construction type, and service description. The letter T as the first character in the tire size means the tire is for temporary use only.

(7) TPC Spec (Tire Performance Criteria Specification) : Original equipment tires designed to GM's specific tire performance criteria have a TPC specification code molded onto the sidewall. GM's TPC specifications meet or exceed all federal safety guidelines.

Tire Designations

Tire Size

The following is an example of a typical passenger vehicle tire size.

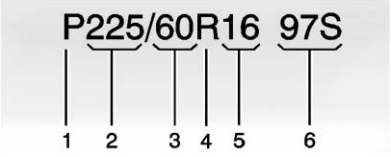

(1) Passenger (P-Metric) Tire : The United States version of a metric tire sizing system. The letter P as the first character in the tire size means a passenger vehicle tire engineered to standards set by the U.S. Tire and Rim Association.

(2) Tire Width : The three-digit number indicates the tire section width in millimeters from sidewall to sidewall.

(3) Aspect Ratio : A two-digit number that indicates the tire height-to-width measurements. For example, if the tire size aspect ratio is 60, as shown in item 3 of the illustration, it would mean that the tire's sidewall is 60 percent as high as it is wide.

(4) Construction Code : A letter code is used to indicate the type of ply construction in the tire. The letter R means radial ply construction; the letter D means diagonal or bias ply construction; and the letter B means belted-bias ply construction.

(5) Rim Diameter : Diameter of the wheel in inches.

(6) Service Description : These characters represent the load index and speed rating of the tire. The load index represents the load carrying capacity a tire is certified to carry. The speed rating is the maximum speed a tire is certified to carry a load.

Tire Terminology and Definitions

Air Pressure : The amount of air inside the tire pressing outward on each square inch of the tire. Air pressure is expressed in kPa (kilopascal) or psi (pounds per square inch).

Accessory Weight : The combined weight of optional accessories. Some examples of optional accessories are automatic transmission, power windows, power seats, and air conditioning.

Aspect Ratio : The relationship of a tire's height to its width.

Belt : A rubber coated layer of cords between the plies and the tread. Cords may be made from steel or other reinforcing materials.

Bead : The tire bead contains steel wires wrapped by steel cords that hold the tire onto the rim.

Bias Ply Tire : A pneumatic tire in which the plies are laid at alternate angles less than 90 degrees to the centerline of the tread.

Cold Tire Pressure : The amount of air pressure in a tire, measured in kPa (kilopascal) or psi (pounds per square inch) before a tire has built up heat from driving. See *Tire Pressure* ⇨ *307*.

Curb Weight : The weight of a motor vehicle with standard and optional equipment including the maximum capacity of fuel, oil, and coolant, but without passengers and cargo.

DOT Markings : A code molded into the sidewall of a tire signifying that the tire is in compliance with the U.S. Department of Transportation (DOT) Motor Vehicle Safety Standards. The DOT code includes the Tire Identification

Number (TIN), an alphanumeric designator which can also identify the tire manufacturer, production plant, brand, and date of production.

GVWR : Gross Vehicle Weight Rating. See *Vehicle Load Limits* ⇨ *181*.

GAWR FRT : Gross Axle Weight Rating for the front axle. See *Vehicle Load Limits* ⇨ *181*.

GAWR RR : Gross Axle Weight Rating for the rear axle. See *Vehicle Load Limits* ⇨ *181*.

Intended Outboard Sidewall : The side of an asymmetrical tire that must always face outward when mounted on a vehicle.

Kilopascal (kPa) : The metric unit for air pressure.

Light Truck (LT-Metric) Tire : A tire used on light duty trucks and some multipurpose passenger vehicles.

Load Index : An assigned number ranging from 1 to 279 that corresponds to the load carrying capacity of a tire.

Maximum Inflation Pressure : The maximum air pressure to which a cold tire can be inflated. The maximum air pressure is molded onto the sidewall.

Maximum Load Rating : The load rating for a tire at the maximum permissible inflation pressure for that tire.

Maximum Loaded Vehicle Weight : The sum of curb weight, accessory weight, vehicle capacity weight, and production options weight.

Normal Occupant Weight : The number of occupants a vehicle is designed to seat multiplied by 68 kg (150 lb). See *Vehicle Load Limits* ⇨ *181*.

Occupant Distribution : Designated seating positions.

Outward Facing Sidewall : The side of an asymmetrical tire that has a particular side that faces outward when mounted on a vehicle. The side of the tire that contains a whitewall, bears white lettering, or bears manufacturer, brand, and/or model name molding that is higher or deeper than the same moldings on the other sidewall of the tire.

Passenger (P-Metric) Tire : A tire used on passenger cars and some light duty trucks and multipurpose vehicles.

Recommended Inflation Pressure : Vehicle manufacturer's recommended tire inflation pressure as shown on the tire placard.
See *Tire Pressure* ⇨ *307* and *Vehicle Load Limits* ⇨ *181*.

Radial Ply Tire : A pneumatic tire in which the ply cords that extend to the beads are laid at 90 degrees to the centerline of the tread.

Rim : A metal support for a tire and upon which the tire beads are seated.

Sidewall : The portion of a tire between the tread and the bead.

Speed Rating : An alphanumeric code assigned to a tire indicating the maximum speed at which a tire can operate.

Traction : The friction between the tire and the road surface. The amount of grip provided.

Tread : The portion of a tire that comes into contact with the road.

Treadwear Indicators : Narrow bands, sometimes called wear bars, that show across the tread of a tire when only 1.6 mm (1/16 in) of tread remains. See *When It Is Time for New Tires* ⇨ *315*.

UTQGS (Uniform Tire Quality Grading Standards) : A tire information system that provides consumers with ratings for a tire's traction, temperature, and treadwear. Ratings are determined by tire manufacturers using government testing procedures. The ratings are molded into the sidewall of the tire. See *Uniform Tire Quality Grading* ⇨ *317*.

Vehicle Capacity Weight : The number of designated seating positions multiplied by 68 kg (150 lb) plus the rated cargo load. See *Vehicle Load Limits* ⇨ *181*.

Vehicle Maximum Load on the Tire : Load on an individual tire due to curb weight, accessory weight, occupant weight, and cargo weight.

Vehicle Placard : A label permanently attached to a vehicle showing the vehicle capacity weight and the original equipment tire size and recommended inflation pressure. See “Tire and Loading Information Label” under *Vehicle Load Limits* ⇨ *181*.

Tire Pressure

Tires need the correct amount of air pressure to operate effectively.

Caution

Neither tire underinflation nor overinflation is good. Underinflated tires, or tires that do not have enough air, can result in:

- Tire overloading and overheating which could lead to a blowout.

(Continued)

Caution (Continued)

- Premature or irregular wear.
- Poor handling.
- Reduced fuel economy.

Overinflated tires, or tires that have too much air, can result in:

- Unusual wear.
- Poor handling.
- Rough ride.
- Needless damage from road hazards.

The Tire and Loading Information label on the vehicle indicates the original equipment tires and the correct cold tire inflation pressures. The recommended pressure is the minimum air pressure needed to support the vehicle's maximum load carrying capacity. See *Vehicle Load Limits* ⇨ *181*.

How the vehicle is loaded affects vehicle handling and ride comfort. Never load the vehicle with more weight than it was designed to carry.

When to Check

Check the tires once a month or more. Do not forget the compact spare, if the vehicle has one. The cold compact spare tire pressure should be at 420 kPa (60 psi). See *Compact Spare Tire* ⇨ *334*.

How to Check

Use a good quality pocket-type gauge to check tire pressure. Proper tire inflation cannot be determined by looking at the tire. Check the tire inflation pressure when the tires are cold, meaning the vehicle has not been driven for at least three hours or no more than 1.6 km (1 mi).

Remove the valve cap from the tire valve stem. Press the tire gauge firmly onto the valve to get a pressure measurement. If the cold tire inflation pressure matches the recommended pressure on the Tire and Loading Information label, no further adjustment is necessary. If the inflation pressure is low, add air until the recommended pressure is reached. If the inflation pressure is high, press on the metal stem in the center of the tire valve to release air.

Recheck the tire pressure with the tire gauge.

Put the valve caps back on the valve stems to keep out dirt and moisture and prevent leaks. Use only valve caps designed for the vehicle by GM. TPMS sensors

could be damaged and would not be covered by the vehicle warranty.

Tire Pressure Monitor System

The Tire Pressure Monitor System (TPMS) uses radio and sensor technology to check tire pressure levels. The TPMS sensors monitor the air pressure in your tires and transmit tire pressure readings to a receiver located in the vehicle.

Each tire, including the spare (if provided), should be checked monthly when cold and inflated to the inflation pressure recommended by the vehicle manufacturer on the vehicle placard or tire inflation pressure label. (If your vehicle has tires of a different size than the size indicated on the vehicle placard or tire inflation pressure label, you should determine the proper tire inflation pressure for those tires.)

As an added safety feature, your vehicle has been equipped with a tire pressure monitoring system (TPMS) that illuminates a low tire pressure telltale when one or more of your tires is significantly under-inflated.

Accordingly, when the low tire pressure telltale illuminates, you should stop and check your tires as soon as possible, and inflate them to the proper pressure. Driving on a significantly under-inflated tire causes the tire to overheat and can lead to tire failure. Under-inflation also reduces fuel efficiency and tire tread life, and may affect the vehicle's handling and stopping ability.

Please note that the TPMS is not a substitute for proper tire maintenance, and it is the driver's responsibility to maintain correct tire pressure, even if under-inflation has not reached the level to trigger illumination of the TPMS low tire pressure telltale.

Your vehicle has also been equipped with a TPMS malfunction indicator to indicate when the system is not operating properly. The TPMS malfunction indicator is combined with the low tire pressure telltale. When the system detects a malfunction, the telltale will flash for approximately one minute and then remain continuously illuminated. This sequence will continue upon subsequent vehicle start-ups as long as the malfunction exists.

When the malfunction indicator is illuminated, the system may not be able to detect or signal low tire pressure as intended. TPMS malfunctions may occur for a variety of reasons, including the installation of replacement or alternate tires or wheels on the vehicle that prevent the TPMS from functioning properly. Always check the TPMS malfunction telltale after replacing one or more tires or wheels on your vehicle to ensure that the replacement or alternate tires and wheels allow the TPMS to continue to function properly.

See *Tire Pressure Monitor Operation* ⇨ *310*.

See *Radio Frequency Statement* ⇨ *379*.

Tire Pressure Monitor Operation

This vehicle may have a Tire Pressure Monitor System (TPMS). The TPMS is designed to warn the driver when a low tire pressure condition exists. TPMS sensors are mounted onto each tire and wheel assembly, excluding the spare tire and wheel assembly. The TPMS sensors monitor the air pressure in the tires and transmit the tire pressure readings to a receiver located in the vehicle.

When a low tire pressure condition is detected, the TPMS illuminates the low tire pressure warning light located on the instrument cluster. If the warning light comes on, stop as soon as possible and inflate the tires to the recommended pressure shown on the Tire and Loading Information label. See *Vehicle Load Limits* ⇨ *181*.

A message to check the pressure in a specific tire displays in the Driver Information Center (DIC). The low tire pressure warning light and the DIC warning message come on at each ignition cycle until the tires are inflated to the correct inflation pressure. Using the DIC, tire pressure levels can be viewed. For additional information and details about the DIC operation and displays see *Driver Information Center (DIC)* ⇨ *136*.

The low tire pressure warning light may come on in cool weather when the vehicle is first started, and then turn off as the vehicle is driven. This could be an early indicator that the air pressure is getting low and needs to be inflated to the proper pressure.

A Tire and Loading Information label, attached to your vehicle, shows the size of the original equipment tires and the correct inflation pressure for the tires when they are cold. See *Vehicle Load Limits* ⇨ *181*, for an example of the Tire and Loading Information label and its location. Also see *Tire Pressure* ⇨ *307*.

The TPMS can warn about a low tire pressure condition but it does not replace normal tire maintenance. See *Tire Inspection* ⇨ *313*, *Tire Rotation* ⇨ *314* and *Tires* ⇨ *300*.

Caution

Tire sealant materials are not all the same. A non-approved tire sealant could damage the TPMS sensors. TPMS sensor damage caused by using an incorrect tire sealant is not covered by the vehicle warranty. Always use only the GM approved tire sealant available through your dealer or included in the vehicle.

Factory-installed Tire Inflator Kits use a GM-approved liquid tire sealant. Using non-approved tire sealants could damage the TPMS

sensors. See *Tire Sealant and Compressor Kit* ⇨ *322* for information regarding the inflator kit materials and instructions.

TPMS Malfunction Light and Message

The TPMS will not function properly if one or more of the TPMS sensors are missing or inoperable. When the system detects a malfunction, the low tire pressure warning light flashes for about one minute and then stays on for the remainder of the ignition cycle. A DIC warning message also displays. The malfunction light and DIC warning message come on at each ignition cycle until the problem is corrected. Some of the conditions that can cause these to come on are:

- One of the road tires has been replaced with the spare tire. The spare tire does not have a TPMS sensor. The malfunction light and DIC message should go off after the road tire is replaced and the sensor matching process is performed successfully. See “TPMS Sensor Matching Process” later in this section.
- The TPMS sensor matching process was not done or not completed successfully after rotating the tires. The malfunction light and the DIC message should go off after successfully completing the sensor matching process. See "TPMS Sensor Matching Process" later in this section.
- One or more TPMS sensors are missing or damaged. The malfunction light and the DIC message should go off when the TPMS sensors are installed and the sensor matching process is performed successfully. See your dealer for service.
- Replacement tires or wheels do not match the original equipment tires or wheels. Tires and wheels other than those recommended could prevent the TPMS from functioning properly. See *Buying New Tires* ⇨ *315*.
- Operating electronic devices or being near facilities using radio wave frequencies similar to the TPMS could cause the TPMS sensors to malfunction.

If the TPMS is not functioning properly it cannot detect or signal a low tire pressure condition. See your dealer for service if the TPMS malfunction light and DIC message come on and stay on.

Tire Fill Alert (If Equipped)

This feature provides visual and audible alerts outside the vehicle to help when inflating an underinflated tire to the recommended cold tire pressure.

When the low tire pressure warning light comes on:

1. Park the vehicle in a safe, level place.
2. Set the parking brake firmly.
3. Place the vehicle in P (Park).
4. Add air to the tire that is underinflated. The turn signal lamp will flash.

When the recommended pressure is reached, the horn sounds once and the turn signal lamp will stop flashing and briefly turn solid.

Repeat these steps for all underinflated tires that have illuminated the low tire pressure warning light.

If the tire is overinflated by more than 35 kPa (5 psi), the horn will sound multiple times and the turn signal lamp will continue to flash for eight seconds after filling stops. To release and correct the pressure, while the turn signal lamp is still flashing, briefly press the center of the valve stem. When the recommended pressure is reached, the horn sounds once.

If the turn signal lamp does not flash within 15 seconds after starting to inflate the tire, the tire fill alert has not been activated or is not working.

If the hazard warning flashers are on, the tire fill alert visual feedback will not work properly.

The TPMS will not activate the tire fill alert properly under the following conditions:

- There is interference from an external device or transmitter.
- The air pressure from the inflation device is not sufficient to inflate the tire.
- There is a malfunction in the TPMS.
- There is a malfunction in the horn or turn signal lamps.
- The identification code of the TPMS sensor is not registered to the system.
- The battery of the TPMS sensor is low.

If the tire fill alert does not operate due to TPMS interference, move the vehicle about 1 m (3 ft) back or forward and try again. If the tire fill alert feature is not working, use a tire pressure gauge.

TPMS Sensor Matching Process

Each TPMS sensor has a unique identification code. The identification code needs to be matched to a new tire/wheel position after rotating the vehicle's tires or replacing one or more of the TPMS sensors. The TPMS sensor matching process should also be performed after replacing a spare tire with a road tire containing the TPMS sensor. The malfunction light and the DIC message should go off at the next ignition cycle. The sensors are matched to the tire/wheel positions, using a TPMS relearn tool, in the following order: driver side front tire, passenger side front tire, passenger side rear tire, and driver side rear tire. See your dealer for service or to purchase a relearn tool. A TPMS relearn tool can also be purchased. See Tire Pressure Monitor Sensor Activation Tool at www.gmtoolsandequipment.com or call 1-800-GM TOOLS (1-800-468-6657).

There are two minutes to match the first tire/wheel position, and five minutes overall to match all four tire/wheel positions. If it takes longer, the matching process stops and must be restarted.

The TPMS sensor matching process is:

1. Set the parking brake.
2. Place the vehicle in Service Mode. See *Ignition Positions* ⇨ *186*.
3. Make sure the Tire Pressure info page option is turned on. The info pages on the DIC can be turned on and off through the Options menu. See *Driver Information Center (DIC)* ⇨ *136*.
4. Use the DIC controls on the right side of the steering wheel to scroll to the Tire Pressure screen under the DIC info page.
5. Press and hold ✓ in the center of the DIC controls. The horn sounds twice to signal the receiver is in relearn mode and the TIRE LEARNING ACTIVE message displays on the DIC display.
6. Start with the driver side front tire.
7. Place the relearn tool against the tire sidewall, near the valve stem. Then press the button to activate the TPMS sensor. A horn chirp confirms that the sensor identification code has been matched to this tire and wheel position.
8. Proceed to the passenger side front tire, and repeat the procedure in Step 7.
9. Proceed to the passenger side rear tire, and repeat the procedure in Step 7.
10. Proceed to the driver side rear tire, and repeat the procedure in Step 7. The horn sounds two times to indicate the sensor identification code has been matched to the driver side rear tire, and the TPMS sensor matching process is no longer active. The TIRE LEARNING ACTIVE message on the DIC display goes off.
11. Turn the vehicle off.
12. Set all four tires to the recommended air pressure level as indicated on the Tire and Loading Information label.

Tire Inspection

We recommend that the tires, including the spare tire, if the vehicle has one, be inspected for signs of wear or damage at least once a month.

Replace the tire if:

- The indicators at three or more places around the tire can be seen.
- There is cord or fabric showing through the tire's rubber.

- The tread or sidewall is cracked, cut, or snagged deep enough to show cord or fabric.
- The tire has a bump, bulge, or split.
- The tire has a puncture, cut, or other damage that cannot be repaired well because of the size or location of the damage.

Tire Rotation

Tires should be rotated every 12 000 km (7,500 mi). See *Maintenance Schedule* ⇨ *353*.

Tires are rotated to achieve a more uniform wear for all tires. The first rotation is the most important.

Anytime unusual wear is noticed, rotate the tires as soon as possible, check for proper tire inflation pressure, and check for damaged tires or wheels. If the unusual wear continues after the rotation, check the wheel alignment.
See *When It Is Time for New Tires* ⇨ *315* and *Wheel Replacement* ⇨ *319*.

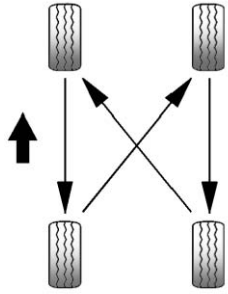

Use this rotation pattern when rotating the tires.

Do not include the compact spare tire in the tire rotation.

Adjust the front and rear tires to the recommended inflation pressure on the Tire and Loading Information label after the tires have been rotated. See *Tire Pressure* ⇨ *307* and *Vehicle Load Limits* ⇨ *181*.

Reset the Tire Pressure Monitor System. See *Tire Pressure Monitor Operation* ⇨ *310*.

Check that all wheel nuts are properly tightened. See “Wheel Nut Torque” under *Capacities and Specifications* ⇨ *366*.

⚠ Warning

Rust or dirt on a wheel, or on the parts to which it is fastened, can make wheel nuts become loose after time. The wheel could come off and cause an accident. When changing a wheel, remove any rust or dirt from places where the wheel attaches to the vehicle. In an emergency, a cloth or a paper towel can be used; however, use a scraper or wire brush later to remove all rust or dirt.

Lightly coat the center of the wheel hub with wheel bearing grease after a wheel change or tire rotation to prevent corrosion or rust build-up. Do not get grease on the flat wheel mounting surface or on the wheel nuts or bolts.

When It Is Time for New Tires

Factors such as maintenance, temperatures, driving speeds, vehicle loading, and road conditions affect the wear rate of the tires.

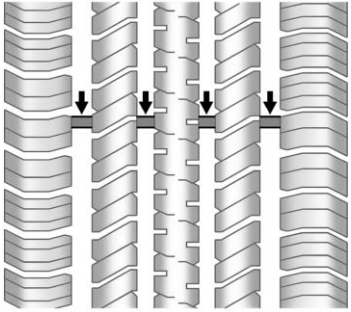

Treadwear indicators are one way to tell when it is time for new tires. Treadwear indicators appear when the tires have only 1.6 mm (1/16 in) or less of tread remaining.
See *Tire Inspection* ⇨ *313* and *Tire Rotation* ⇨ *314*.

The rubber in tires ages over time. This also applies to the spare tire, if the vehicle has one, even if it is never used. Multiple factors including temperatures, loading conditions, and inflation pressure maintenance affect how fast aging takes place. GM recommends that tires, including the spare if equipped, be replaced after six years, regardless of tread wear. The tire manufacture date is the last four digits of the DOT Tire Identification Number (TIN) which is molded into one side of the tire sidewall. The first two digits represent the week (01–52) and the last two digits, the year. For example, the third week of the year 2010 would have a four-digit DOT date of 0310.

Vehicle Storage

Tires age when stored normally mounted on a parked vehicle. Park a vehicle that will be stored for at least a month in a cool, dry, clean area away from direct sunlight to slow aging. This area should be free of grease, gasoline, or other substances that can deteriorate rubber.

Parking for an extended period can cause flat spots on the tires that may result in vibrations while driving. When storing a vehicle for at least a month, remove the tires or raise the vehicle to reduce the weight from the tires.

Buying New Tires

GM has developed and matched specific tires for the vehicle. The original equipment tires installed were designed to meet General Motors Tire Performance Criteria Specification (TPC Spec) system rating. When replacement tires are needed,

GM strongly recommends buying tires with the same TPC Spec rating.

GM's exclusive TPC Spec system considers over a dozen critical specifications that impact the overall performance of the vehicle, including brake system performance, ride and handling, traction control, and tire pressure monitoring performance. GM's TPC Spec number is molded onto the tire's sidewall near the tire size. If the tires have an all-season tread design, the TPC Spec number will be followed by MS for mud and snow. See *Tire Sidewall Labeling* ⇨ *302*.

GM recommends replacing worn tires in complete sets of four. Uniform tread depth on all tires will help to maintain the performance of the vehicle. Braking and handling performance may be adversely affected if all the tires are not replaced at the same time. If proper rotation and maintenance have been done, all four tires should wear out at about the same time. See *Tire Rotation* ⇨ *314*. However, if it is necessary to replace only one axle set of worn tires, place the new tires on the rear axle.

Winter tires with the same speed rating as the original equipment tires may not be available for H, V, W, Y and ZR speed rated tires. Never exceed the winter tires' maximum speed capability when using winter tires with a lower speed rating.

⚠ Warning

Tires could explode during improper service. Attempting to mount or dismount a tire could cause injury or death.

(Continued)

Warning (Continued)

Only your dealer or authorized tire service center should mount or dismount the tires.

⚠ Warning

Mixing tires of different sizes, brands, or types may cause loss of control of the vehicle, resulting in a crash or other vehicle damage. Use the correct size, brand, and type of tires on all wheels.

⚠ Warning

Using bias-ply tires on the vehicle may cause the wheel rim flanges to develop cracks after many miles of driving. A tire and/or wheel could fail

(Continued)

Warning (Continued)

suddenly and cause a crash. Use only radial-ply tires with the wheels on the vehicle.

If the vehicle tires must be replaced with a tire that does not have a TPC Spec number, make sure they are the same size, load range, speed rating, and construction (radial) as the original tires.

Vehicles that have a tire pressure monitoring system could give an inaccurate low-pressure warning if non-TPC Spec rated tires are installed. See *Tire Pressure Monitor System* ⇨ *309*.

The Tire and Loading Information label indicates the original equipment tires on the vehicle. See *Vehicle Load Limits* ⇨ *181*.

Different Size Tires and Wheels

If wheels or tires are installed that are a different size than the original equipment wheels and tires, vehicle performance, including its braking, ride and handling characteristics, stability, and resistance to rollover may be affected. If the vehicle has electronic systems such as antilock brakes, rollover airbags, traction control, electronic stability control, or All-Wheel Drive, the performance of these systems can also be affected.

⚠ Warning

If different sized wheels are used, there may not be an acceptable level of performance and safety if tires not recommended for those wheels are selected. This increases the chance of a crash and serious injury. Only use GM specific wheel and tire systems

(Continued)

Warning (Continued)

developed for the vehicle, and have them properly installed by a GM certified technician.

See *Buying New Tires* ⇨ *315* and *Accessories and Modifications* ⇨ *261*.

Uniform Tire Quality Grading

The following information relates to the system developed by the United States National Highway Traffic Safety Administration (NHTSA), which grades tires by treadwear, traction, and temperature performance. This applies only to vehicles sold in the United States. The grades are molded on the sidewalls of most passenger car tires. The Uniform Tire Quality Grading (UTQG) system does not apply to deep tread, winter tires,

compact spare tires, tires with nominal rim diameters of 10 to 12 inches (25 to 30 cm), or to some limited-production tires.

While the tires available on General Motors passenger cars and light trucks may vary with respect to these grades, they must also conform to federal safety requirements and additional General Motors Tire Performance Criteria (TPC) standards.

Quality grades can be found where applicable on the tire sidewall between tread shoulder and maximum section width. For example:

Treadwear 200 Traction AA Temperature A

All Passenger Car Tires Must Conform to Federal Safety Requirements In Addition To These Grades.

Treadwear

The treadwear grade is a comparative rating based on the wear rate of the tire when tested under controlled conditions on a specified government test course. For example, a tire graded 150 would wear one and one-half (1½) times as well on the government course as a tire graded 100. The relative performance of tires depends upon the actual conditions of their use, however, and may depart significantly from the norm due to variations in driving habits, service practices and differences in road characteristics and climate.

Traction

The traction grades, from highest to lowest, are AA, A, B, and C. Those grades represent the tire's ability to stop on wet pavement as measured under controlled conditions on specified government test surfaces of asphalt and concrete. A tire marked C may have poor traction performance. Warning: The traction grade assigned to this tire is based on straight-ahead braking traction tests, and does not include acceleration, cornering, hydroplaning, or peak traction characteristics.

Temperature

The temperature grades are A (the highest), B, and C, representing the tire's resistance to the generation of heat and its ability to dissipate heat when tested under controlled conditions on a specified indoor laboratory test wheel. Sustained high temperature can cause the material of the tire to degenerate and reduce tire life, and excessive temperature can lead to sudden tire failure. The grade C corresponds to a level of

performance which all passenger car tires must meet under the Federal Motor Safety Standard No. 109. Grades B and A represent higher levels of performance on the laboratory test wheel than the minimum required by law. Warning: The temperature grade for this tire is established for a tire that is properly inflated and not overloaded. Excessive speed, underinflation, or excessive loading, either separately or in combination, can cause heat buildup and possible tire failure.

Wheel Alignment and Tire Balance

The tires and wheels were aligned and balanced at the factory to provide the longest tire life and best overall performance. Adjustments to wheel alignment and tire balancing are not necessary on a regular basis. Consider an alignment check if there is unusual tire wear or the vehicle is significantly pulling to one side or the other. Some slight pull to the left or right, depending on the crown of the road and/or other road surface variations such as troughs or ruts, is normal. If the vehicle is vibrating when driving on a smooth road, the tires and wheels may need to be rebalanced. See your dealer for proper diagnosis.

Wheel Replacement

Replace any wheel that is bent, cracked, or badly rusted or corroded. If wheel nuts keep coming loose, the wheel, wheel bolts, and wheel nuts should be replaced. If the wheel leaks air, replace it. Some aluminum wheels can be repaired. See your dealer if any of these conditions exist.

Your dealer will know the kind of wheel that is needed.

Each new wheel should have the same load-carrying capacity, diameter, width, offset, and be mounted the same way as the one it replaces.

Replace wheels, wheel bolts, wheel nuts, or Tire Pressure Monitor System (TPMS) sensors with new GM original equipment parts.

⚠ Warning

Using the wrong replacement wheels, wheel bolts, or wheel nuts can be dangerous. It could affect the braking and handling of the vehicle. Tires can lose air, and cause loss of control, causing a crash. Always use the correct wheel, wheel bolts, and wheel nuts for replacement.

Caution

The wrong wheel can also cause problems with bearing life, brake cooling, speedometer or odometer calibration, headlamp aim, bumper height, vehicle ground clearance, and tire or tire chain clearance to the body and chassis.

Used Replacement Wheels

⚠ Warning

Replacing a wheel with a used one is dangerous. How it has been used or how far it has been driven may be unknown. It could fail suddenly and cause a crash. When replacing wheels, use a new GM original equipment wheel.

Tire Chains

⚠ Warning

Do not use tire chains. There is not enough clearance. Tire chains used on a vehicle without the proper amount of clearance can cause damage to the brakes, suspension, or other vehicle parts. The area damaged by the tire chains could cause loss of control and a crash.

(Continued)

Warning (Continued)

Use another type of traction device only if its manufacturer recommends it for the vehicle's tire size combination and road conditions. Follow that manufacturer's instructions. To avoid vehicle damage, drive slow and readjust or remove the traction device if it contacts the vehicle. Do not spin the wheels. If traction devices are used, install them on the front tires.

If a Tire Goes Flat

It is unusual for a tire to blow out while driving, especially if the tires are maintained properly. See *Tires* ⇨ *300*. If air goes out of a tire, it is much more likely to leak out slowly. But if there is ever a blowout, here are a few tips about what to expect and what to do:

If a front tire fails, the flat tire creates a drag that pulls the vehicle toward that side. Take your foot off the accelerator pedal and grip the steering wheel firmly. Steer to maintain lane position, and then gently brake to a stop, well off the road, if possible.

A rear blowout, particularly on a curve, acts much like a skid and may require the same correction as used in a skid. Stop pressing the accelerator pedal and steer to straighten the vehicle. It may be very bumpy and noisy. Gently brake to a stop, well off the road, if possible.

⚠ Warning

Driving on a flat tire will cause permanent damage to the tire. Re-inflating a tire after it has been driven on while severely underinflated or flat may cause a blowout and a serious crash. Never attempt to re-inflate a tire that has been driven on while severely underinflated or flat. Have your dealer or an authorized

(Continued)

Warning (Continued)

tire service center repair or replace the flat tire as soon as possible.

⚠ Warning

Lifting a vehicle and getting under it to do maintenance or repairs is dangerous without the appropriate safety equipment and training. If a jack is provided with the vehicle, it is designed only for changing a flat tire. If it is used for anything else, you or others could be badly injured or killed if the vehicle slips off the jack. If a jack is provided with the vehicle, only use it for changing a flat tire.

If a tire goes flat, avoid further tire and wheel damage by driving slowly to a level place, well off the road, if possible. Turn on the hazard warning flashers. See *Hazard Warning Flashers* ⇨ *154*.

⚠ Warning

Changing a tire can be dangerous. The vehicle can slip off the jack and roll over or fall causing injury or death. Find a level place to change the tire. To help prevent the vehicle from moving:

1. Set the parking brake firmly.
2. Put an automatic transmission in P (Park) or a manual transmission in 1 (First) or R (Reverse).
3. Turn off the engine and do not restart while the vehicle is raised.
4. Do not allow passengers to remain in the vehicle.
5. Place wheel blocks, if equipped, on both sides of the tire at the opposite corner of the tire being changed.

This vehicle may come with a jack and spare tire or a tire sealant and compressor kit. To use the jacking equipment to change a spare tire safely, follow the instructions below. Then see *Tire Changing* ⇨ *329*. To use the tire sealant and compressor kit, see *Tire Sealant and Compressor Kit* ⇨ *322*.

When the vehicle has a flat tire (2), use the following example as a guide to assist you in the placement of wheel blocks (1), if equipped.

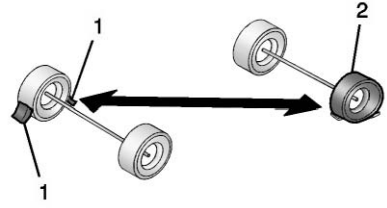

1. Wheel Block (If Equipped)
2. Flat Tire

The following information explains how to repair or change a tire.

Tire Sealant and Compressor Kit

⚠ Warning

Idling a vehicle in an enclosed area with poor ventilation is dangerous. Engine exhaust may enter the vehicle. Engine exhaust contains carbon monoxide (CO) which cannot be seen or smelled. It can cause unconsciousness and even death. Never run the engine in an enclosed area that has no fresh air ventilation. For more information, see *Engine Exhaust* ⇨ *196*.

⚠ Warning

Overinflating a tire could cause the tire to rupture and you or others could be injured. Be sure to read and follow the tire sealant and compressor kit instructions

(Continued)

Warning (Continued)

and inflate the tire to its recommended pressure. Do not exceed the recommended pressure.

⚠ Warning

Storing the tire sealant and compressor kit or other equipment in the passenger compartment of the vehicle could cause injury. In a sudden stop or collision, loose equipment could strike someone. Store the tire sealant and compressor kit in its original location.

If this vehicle has a tire sealant and compressor kit, there may not be a spare tire or tire changing equipment, and on some vehicles there may not be a place to store a tire.

The tire sealant and compressor can be used to temporarily seal punctures up to 6 mm (0.25 in) in the tread area of the tire. It can also be used to inflate an underinflated tire.

If the tire has been separated from the wheel, has damaged sidewalls, or has a large puncture, the tire is too severely damaged for the tire sealant and compressor kit to be effective. See *Roadside Assistance Program* ⇨ *373*.

Read and follow all of the tire sealant and compressor kit instructions.

The kit includes:

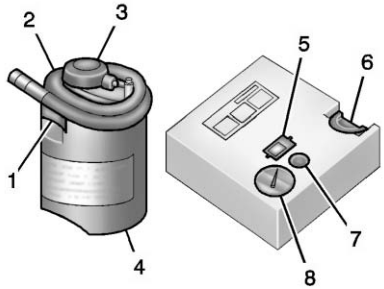

1. Sealant Canister Inlet Valve
2. Sealant/Air Hose
3. Base of Sealant Canister
4. Tire Sealant Canister
5. On/Off Button
6. Slot on Top of Compressor
7. Pressure Deflation Button
8. Pressure Gauge

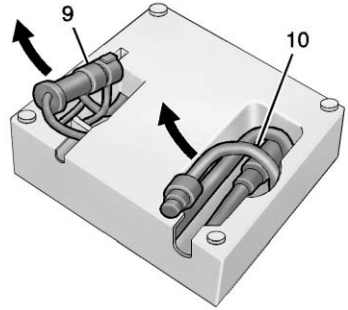

9. Power Plug
10. Air Only Hose

Tire Sealant

Read and follow the safe handling instructions on the label adhered to the tire sealant canister (4).

Check the tire sealant expiration date on the tire sealant canister. The tire sealant canister (4) should be replaced before its expiration date. Replacement tire sealant canisters are available at your local dealer.

There is only enough sealant to seal one tire. After usage, the tire sealant canister must be replaced.

Using the Tire Sealant and Compressor Kit to Temporarily Seal and Inflate a Punctured Tire

When using the tire sealant and compressor kit during cold temperatures, warm the kit in a heated environment for five minutes. This will help to inflate the tire faster.

If a tire goes flat, avoid further tire and wheel damage by driving slowly to a level place. Turn on the hazard warning flashers. See *Hazard Warning Flashers* ⇨ *154*.

See *If a Tire Goes Flat* ⇨ *320* for other important safety warnings.

Do not remove any objects that have penetrated the tire.

1. Remove the tire sealant canister (4) and compressor from its storage location. See *Storing the Tire Sealant and Compressor Kit* ⇨ *328*.
2. Remove the air only hose (10) and the power plug (9) from the bottom of the compressor.

3. Place the compressor on the ground near the flat tire.

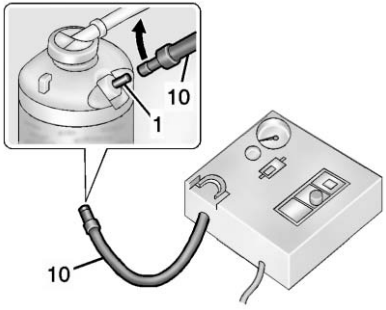

4. Attach the air only hose (10) to the sealant canister inlet valve (1) by turning it clockwise until tight.

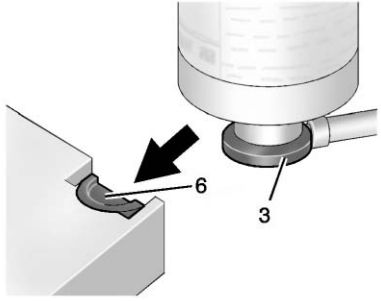

5. Slide the base of the tire sealant canister (3) into the slot on the top of the compressor (6) to hold it upright.

   Make sure the tire valve stem is positioned close to the ground so the hose will reach it.

6. Remove the valve stem cap from the flat tire by turning it counterclockwise.

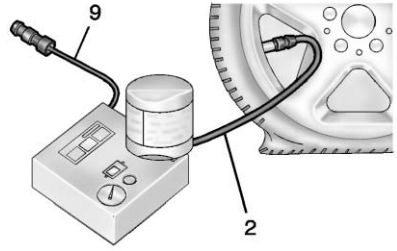

7. Attach the sealant/air hose (2) to the tire valve stem by turning it clockwise until tight.

8. Plug the power plug (9) into the accessory power outlet in the vehicle. Unplug all items from other accessory power outlets. See *Power Outlets* ⇨ *114*.

   If the vehicle has an accessory power outlet, do not use the cigarette lighter.

   If the vehicle only has a cigarette lighter, use the cigarette lighter.

   Do not pinch the power plug cord in the door or window.

9. Start the vehicle. The vehicle must be running while using the air compressor.
10. Press the on/off button (5) to turn the tire sealant and compressor kit on.

    The compressor will inject sealant and air into the tire.

    The pressure gauge (8) will initially show a high pressure while the compressor pushes the sealant into the tire. Once the sealant is completely dispersed into the tire, the pressure will quickly drop and start to rise again as the tire inflates with air only.
11. Inflate the tire to the recommended inflation pressure using the pressure gauge (8). The recommended inflation pressure can be found on the Tire and Loading Information label. See *Tire Pressure* ⇨ *307*.

    The pressure gauge (8) may read higher than the actual tire pressure while the compressor is on. Turn the compressor off to get an accurate pressure reading. The compressor may be turned on/off until the correct pressure is reached.

Caution

If the recommended pressure cannot be reached after approximately 25 minutes, the vehicle should not be driven farther. The tire is too severely damaged and the tire sealant and compressor kit cannot inflate the tire. Remove the power plug from the accessory power outlet and unscrew the inflating hose from the tire valve. See *Roadside Assistance Program* ⇨ *373*.

12. Press the on/off button (5) to turn the tire sealant and compressor kit off.

    The tire is not sealed and will continue to leak air until the vehicle is driven and the sealant is distributed in the tire. Therefore, Steps 13–21 must be done immediately after Step 12.

    Be careful while handling the tire sealant and compressor kit as it could be warm after usage.
13. Unplug the power plug (9) from the accessory power outlet in the vehicle.
14. Turn the sealant/air hose (2) counterclockwise to remove it from the tire valve stem.
15. Replace the tire valve stem cap.
16. Remove the tire sealant canister (4) from the slot on top of the compressor (6).
17. Turn the air only hose (10) counterclockwise to remove it from the tire sealant canister inlet valve (1).
18. Turn the sealant/air hose (2) clockwise onto the sealant canister inlet valve (1) to prevent sealant leakage.

19. Return the air only hose (10) and power plug (9) back to their original storage location.

20. If the flat tire was able to inflate to the recommended inflation pressure, remove the maximum speed label from the sealant canister and place it in a highly visible location.

    Do not exceed the speed on this label until the damaged tire is repaired or replaced.

21. Return the equipment to its original storage location in the vehicle.
22. Immediately drive the vehicle 8 km (5 mi) to distribute the sealant in the tire.
23. Stop at a safe location and check the tire pressure. Refer to Steps 1–10 under “Using the Tire Sealant and Compressor Kit without Sealant to Inflate a Tire (Not Punctured).”

    If the tire pressure has fallen more than 68 kPa (10 psi) below the recommended inflation pressure, stop driving the vehicle. The tire is too severely damaged and the tire sealant cannot seal the tire. See *Roadside Assistance Program* ⇨ *373*.

    If the tire pressure has not dropped more than 68 kPa (10 psi) from the recommended inflation pressure, inflate the tire to the recommended inflation pressure.

24. Wipe off any sealant from the wheel, tire, or vehicle.
25. Dispose of the used tire sealant canister (4) at a local dealer or in accordance with local state codes and practices.
26. Replace it with a new canister available from your dealer.
27. After temporarily sealing a tire using the tire sealant and compressor kit, take the vehicle to an authorized dealer within 161 km (100 mi) of driving to have the tire repaired or replaced.

Using the Tire Sealant and Compressor Kit without Sealant to Inflate a Tire (Not Punctured)

The kit includes:

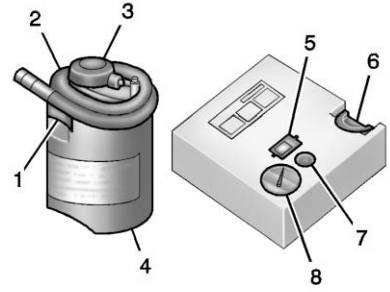

1. Sealant Canister Inlet Valve
2. Sealant/Air Hose
3. Base of Sealant Canister

4. Tire Sealant Canister
5. On/Off Button
6. Slot on Top of Compressor
7. Pressure Deflation Button
8. Pressure Gauge

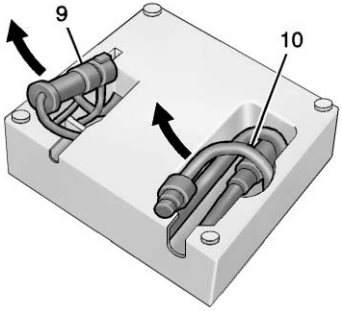

9. Power Plug
10. Air Only Hose

If a tire goes flat, avoid further tire and wheel damage by driving slowly to a level place. Turn on the hazard warning flashers. See *Hazard Warning Flashers* ⇨ *154*.

See *If a Tire Goes Flat* ⇨ *320* for other important safety warnings.

1. Remove the compressor from its storage location. See *Storing the Tire Sealant and Compressor Kit* ⇨ *328*.
2. Remove the air only hose (10) and the power plug (9) from the bottom of the compressor.
3. Place the compressor on the ground near the flat tire.

   Make sure the tire valve stem is positioned close to the ground so the hose will reach it.
4. Remove the valve stem cap from the flat tire by turning it counterclockwise.
5. Attach the air only hose (10) to the tire valve stem by turning it clockwise until tight.
6. Plug the power plug (9) into the accessory power outlet in the vehicle. Unplug all items from other accessory power outlets. See *Power Outlets* ⇨ *114*.

   If the vehicle has an accessory power outlet, do not use the cigarette lighter.

   If the vehicle only has a cigarette lighter, use the cigarette lighter.

   Do not pinch the power plug cord in the door or window.
7. Start the vehicle. The vehicle must be running while using the air compressor.
8. Press the on/off button (5) to turn the tire sealant and compressor kit on.

   The compressor will inflate the tire with air only.
9. Inflate the tire to the recommended inflation pressure using the pressure gauge (8). The recommended inflation pressure can be found on the Tire and Loading Information label. See *Tire Pressure* ⇨ *307*.

   The pressure gauge (8) may read higher than the actual tire pressure while the compressor is on. Turn the compressor off to get an accurate pressure

reading. The compressor may be turned on/off until the correct pressure is reached.

Caution

If the recommended pressure cannot be reached after approximately 25 minutes, the vehicle should not be driven farther. The tire is too severely damaged and the tire sealant and compressor kit cannot inflate the tire. Remove the power plug from the accessory power outlet and unscrew the inflating hose from the tire valve. See *Roadside Assistance Program* ⇨ *373*.

10. Press the on/off button (5) to turn the tire sealant and compressor kit off.

    Be careful while handling the compressor as it could be warm after usage.

11. Unplug the power plug (9) from the accessory power outlet in the vehicle.
12. Turn the air only hose (10) counterclockwise to remove it from the tire valve stem.
13. Replace the tire valve stem cap.
14. Return the air only hose (10) and power plug (9) back to their original storage location.
15. Return the equipment to its original storage location in the vehicle.

The tire sealant and compressor kit has accessory adapters located in a compartment on the bottom of its housing that can be used to inflate air mattresses, balls, etc.

Storing the Tire Sealant and Compressor Kit

The tire sealant and compressor kit is in a bag in the rear compartment storage area.

1. Open the liftgate. See *Liftgate* ⇨ *41*.
2. Fold the rear part of the load floor to the front.

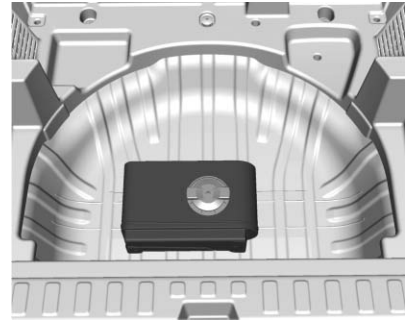

3. Turn the retainer nut counterclockwise to remove the tire sealant and compressor kit bag.
4. Remove the tire sealant and compressor kit from the bag.

To store the tire sealant and compressor kit, reverse the steps.

Tire Changing

Removing the Spare Tire and Tools

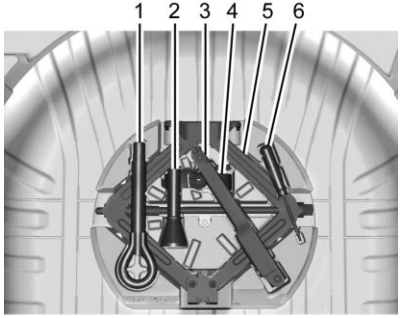

1. Tow Eye (If Equipped)
2. Capless Funnel Adapter (If Equipped)
3. Wheel Wrench
4. Strap
5. Jack
6. Screwdriver (If Equipped)

To access the spare tire and tools:

1. Open the liftgate. See *Liftgate* ⇨ *41*.
2. Fold the rear part of the load floor to the front, pull it rearward to disengage the clips, then pull upward to remove it.
3. Pull the spare tire cover forward and upward to remove it.
4. Turn the retainer nut counterclockwise to remove the spare tire. Place the spare tire next to the tire being changed.
5. The jack and tools are stored below the spare tire. Remove them from their container and place them near the tire being changed.

Removing the Flat Tire and Installing the Spare Tire

1. Do a safety check before proceeding. See *If a Tire Goes Flat* ⇨ *320* for more information.
2. For vehicles with a wheel cover or center cap, pull the cover or center cap away from the wheel to remove it. Store the wheel cover in the cargo area until you have the flat tire repaired or replaced.

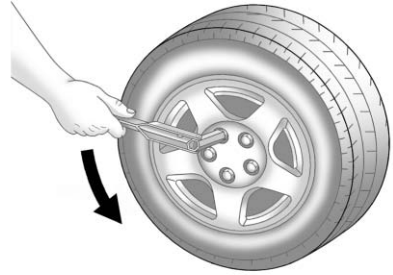

3. Turn the wheel wrench counterclockwise to loosen all the wheel nuts, but do not remove them yet.

Caution
Make sure that the jack lift head is in the correct position or you may damage your vehicle. The repairs would not be covered by your warranty.

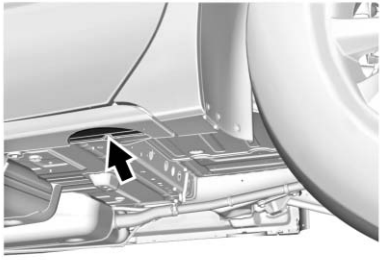

Rear Shown, Front Similar

4. Position the jack lift head at the jack location nearest the flat tire.

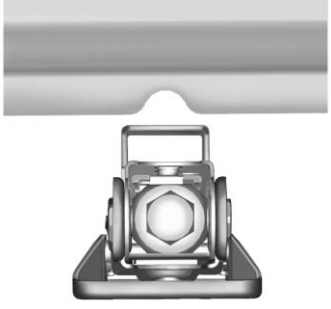

Locate the notch on the sheet metal weld flange. Place the center of the jack lift head on the center of the jack lift notch.

The jack must not be used in any other position.

⚠ Warning

Getting under a vehicle when it is lifted on a jack is dangerous. If the vehicle slips off the jack, you could be badly injured or killed. Never get under a vehicle when it is supported only by a jack.

⚠ Warning

Raising the vehicle with the jack improperly positioned can damage the vehicle and even make the vehicle fall. To help avoid personal injury and vehicle

(Continued)

Warning (Continued)

damage, be sure to fit the jack lift head into the proper location before raising the vehicle.

⚠ Warning

Lifting a vehicle and getting under it to do maintenance or repairs is dangerous without the appropriate safety equipment and training. If a jack is provided with the vehicle, it is designed only for changing a flat tire. If it is used for anything else, you or others could be badly injured or killed if the vehicle slips off the jack. If a jack is provided with the vehicle, only use it for changing a flat tire.

5. Attach the wheel wrench to the jack by fitting both ends over one another.

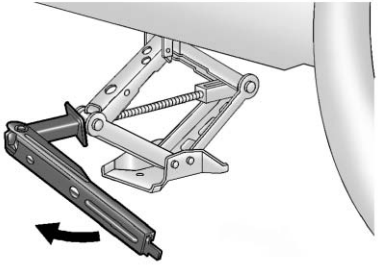

6. Raise the vehicle by turning the wheel wrench clockwise. Raise the vehicle far enough off the ground so there is enough room for the road tire to clear the ground.

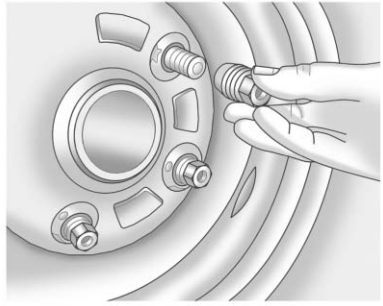

7. Remove all of the wheel nuts.
8. Remove the flat tire.

⚠ Warning

Rust or dirt on a wheel, or on the parts to which it is fastened, can make wheel nuts become loose after time. The wheel could come off and cause an accident. When changing a wheel, remove any rust or dirt from places where the wheel attaches to the vehicle. In an emergency, a cloth or a paper

(Continued)

Warning (Continued)

towel can be used; however, use a scraper or wire brush later to remove all rust or dirt.

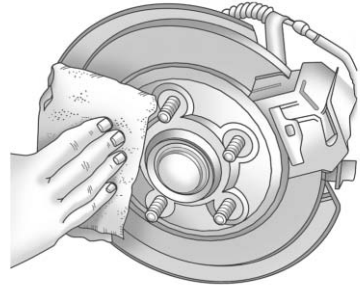

9. Remove any rust or dirt from the wheel bolts, mounting surfaces, and spare wheel.
10. Place the compact spare tire on the wheel-mounting surface.

⚠ Warning

Never use oil or grease on bolts or nuts because the nuts might come loose. The vehicle's wheel could fall off, causing a crash.

11. Reinstall the wheel nuts. Tighten each nut by hand until the wheel is held against the hub.
12. Lower the vehicle by turning the jack handle counterclockwise.

⚠ Warning

Wheel nuts that are improperly or incorrectly tightened can cause the wheels to become loose or come off. The wheel nuts should be tightened with a torque wrench to the proper torque specification after replacing. Follow the torque specification supplied by the aftermarket manufacturer when

(Continued)

Warning (Continued)

using accessory locking wheel nuts. See *Capacities and Specifications* ⇨ *366* for original equipment wheel nut torque specifications.

Caution

Improperly tightened wheel nuts can lead to brake pulsation and rotor damage. To avoid expensive brake repairs, evenly tighten the wheel nuts in the proper sequence and to the proper torque specification. See *Capacities and Specifications* ⇨ *366* for the wheel nut torque specification.

13. Tighten the wheel nuts firmly in a crisscross sequence, as shown.
14. Lower the jack all the way and remove the jack from under the vehicle.
15. Tighten the wheel nuts firmly with the wheel wrench.

When reinstalling the wheel cover or center cap on the full-size tire, tighten all five plastic caps hand snug with the aid of the wheel wrench and tighten them with the wheel wrench an additional one-quarter of a turn.

Caution

Wheel covers will not fit on the vehicle's compact spare. If you try to put a wheel cover on the compact spare, the cover or the spare could be damaged.

Storing a Flat or Spare Tire and Tools

⚠ Warning

Storing a jack, a tire, or other equipment in the passenger compartment of the vehicle could cause injury. In a sudden stop or collision, loose equipment could strike someone. Store all these in the proper place.

To store the flat tire:

1. Return the jack and tools to their original storage location.
2. Replace the spare tire cover.
3. Replace the load floor.
4. Place the flat tire, lying flat, in the rear storage compartment.

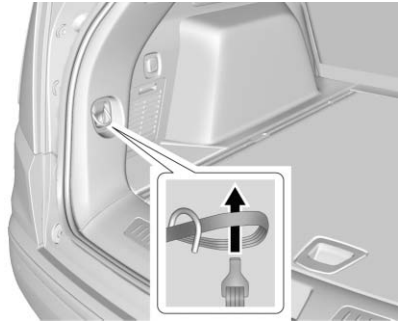

5. Route the loop end of the strap through one of the cargo tie-downs in the rear of the vehicle.

   Then route the hook through the loop and pull the strap to tighten it around the cargo tie-down.
6. Route the hook end of the strap through the wheel.
7. Attach one end of the strap to a cargo tie-down in the rear of the vehicle.

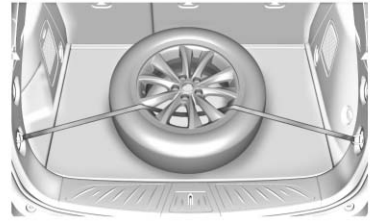

8. Route the strap through the wheel, as shown.
9. Attach the other end of the strap to the other cargo tie-down in the rear of the vehicle.
10. Tighten the strap

The compact spare is for temporary use only. Replace the compact spare tire with a full-size tire as soon as possible.

Compact Spare Tire

⚠ Warning

Driving with more than one compact spare tire at a time could result in loss of braking and handling. This could lead to a crash and you or others could be injured. Use only one compact spare tire at a time.

If this vehicle has a compact spare tire, it was fully inflated when new; however, it can lose air over time. Check the inflation pressure regularly. It should be 420 kPa (60 psi).

Stop as soon as possible and check that the spare tire is correctly inflated after being installed on the vehicle. The compact spare tire is designed for temporary use only. The vehicle will perform differently with the spare tire installed and it is recommended that the vehicle speed be limited to 80 km/h (50 mph). To conserve the tread of the spare tire, have the standard tire repaired or replaced as soon as convenient and return the spare tire to the storage area.

When using a compact spare tire, the AWD (if equipped), ABS, and Traction Control systems may engage until the spare tire is recognized by the vehicle, especially on slippery roads. Adjust driving to reduce possible wheel slip.

Caution

When the compact spare is installed, do not take the vehicle through an automatic car wash with guide rails. The compact spare can get caught on the rails which can damage the tire, wheel, and other parts of the vehicle.

Do not use the compact spare on other vehicles.

Do not mix the compact spare tire or wheel with other wheels or tires. They will not fit. Keep the spare tire and its wheel together.

Caution

Tire chains will not fit the compact spare. Using them can damage the vehicle and the chains. Do not use tire chains on the compact spare.

Jump Starting

Jump Starting - North America

For more information about the vehicle battery, see *Battery - North America* ⇨ *284*.

If the battery has run down, try to use another vehicle and some jumper cables to start your vehicle. Be sure to use the following steps to do it safely.

⚠ Warning

WARNING: Battery posts, terminals, and related accessories contain lead and lead compounds, chemicals known to the State of California to cause cancer and birth defects or other reproductive harm. Batteries also contain other chemicals known to the State of California to cause cancer. **WASH HANDS AFTER**

(Continued)

Warning (Continued)

HANDLING. For more information go to www.P65Warnings.ca.gov/passenger-vehicle.

See *California Proposition 65 Warning* ⇨ *260* and the back cover.

⚠ Warning

Batteries can hurt you. They can be dangerous because:

- They contain acid that can burn you.
- They contain gas that can explode or ignite.
- They contain enough electricity to burn you.

If you do not follow these steps exactly, some or all of these things can hurt you.

Caution

Ignoring these steps could result in costly damage to the vehicle that would not be covered by the vehicle warranty. Trying to start the vehicle by pushing or pulling it will not work, and it could damage the vehicle.

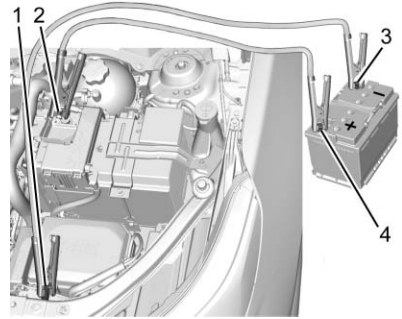

1. Discharged Battery Negative Grounding Stud
2. Discharged Battery Positive Terminal

3. Good Battery Negative Terminal
4. Good Battery Positive Terminal

The jump start negative grounding stud (1) for the discharged battery is to the left of the windshield washer fluid reservoir.

The jump start positive terminal on the discharged battery (2) is located in the engine compartment on the driver side of the vehicle.

The jump start positive terminal (3) and negative terminal (4) are on the battery of the vehicle providing the jump start.

The positive jump start connection for the discharged battery is under a trim cover. Open the cover to expose the terminal.

1. Check the other vehicle. It must have a 12-volt battery with a negative ground system.

Caution

If the other vehicle does not have a 12-volt system with a negative ground, both vehicles can be damaged. Only use a vehicle that has a 12-volt system with a negative ground for jump starting.

2. Position the two vehicles so that they are not touching.
3. Set the parking brake. See *Shifting Into Park* ⇨ *192*.

Caution

If any accessories are left on or plugged in during the jump starting procedure, they could be damaged. The repairs would not be covered by the vehicle warranty. Whenever possible, turn off or unplug all accessories on either vehicle when jump starting.

4. Turn the ignition off. Turn off all lights and accessories in both vehicles, except the hazard warning flashers if needed.

⚠ Warning

An electric fan can start up even when the engine is not running and can injure you. Keep hands, clothing, and tools away from any underhood electric fan.

⚠ Warning

Using a match near a battery can cause battery gas to explode. People have been hurt doing this, and some have been blinded. Use a flashlight if you need more light.

Battery fluid contains acid that can burn you. Do not get it on you. If you accidentally get it in your eyes or on your skin, flush the place with water and get medical help immediately.

⚠ Warning

Fans or other moving engine parts can injure you badly. Keep your hands away from moving parts once the engine is running.

5. Connect one end of the red positive (+) cable to the positive (+) terminal on the discharged battery.
6. Connect the other end of the red positive (+) cable to the positive (+) terminal of the good battery.
7. Connect one end of the black negative (–) cable to the negative (–) terminal of the good battery.
8. Connect the other end of the black negative (–) cable to the negative (–) grounding stud for the discharged battery.
9. Start the engine in the vehicle with the good battery and run the engine at idle speed for at least four minutes.
10. Try to start the vehicle that had the dead battery. If it will not start after a few tries, it probably needs service.

Caution

If the jumper cables are connected or removed in the wrong order, electrical shorting may occur and damage the vehicle. The repairs would not be covered by the vehicle warranty. Always connect and remove the jumper cables in the correct order, making sure that the cables do not touch each other or other metal.

Jumper Cable Removal

Reverse the sequence exactly when removing the jumper cables.

After starting the disabled vehicle and removing the jumper cables, allow it to idle for several minutes.

Towing the Vehicle

Caution

Incorrectly towing a disabled vehicle may cause damage. The damage would not be covered by the vehicle warranty.

Do not lash or hook to suspension components. Use the proper straps around the tires to secure the vehicle.

Use only a flatbed tow truck for towing a disabled vehicle. Never use a sling type lift or damage will occur. Use ramps to help reduce approach angles if necessary. A towed vehicle should have its drive wheels off the ground.

Consult a professional towing service if the disabled vehicle must be towed.

The vehicle is equipped with a tow eye. Only use the tow eye to pull the vehicle onto a flatbed car carrier

from a flat road surface. Do not use the tow eye to pull the vehicle from snow, mud, or sand.

The tow eye is stored underneath the load floor, near the spare tire or the compressor kit, if equipped.

Front Tow Eye

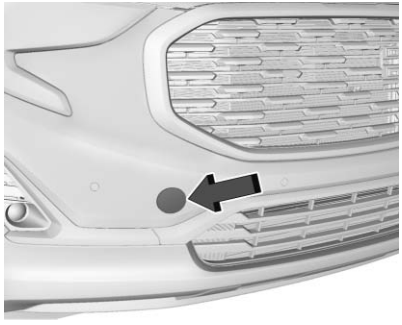

Carefully open the cover by using the small notch that conceals the front tow eye socket.

Install the tow eye into the socket by turning it until it stops.

When the tow eye is removed, reinstall the cover with the notch in the original position.

Rear Tow Eye

If the vehicle is equipped with a hitch, there is no provision to use the tow eye in the rear of the vehicle. The hitch may be used to load the vehicle onto a flatbed tow truck.

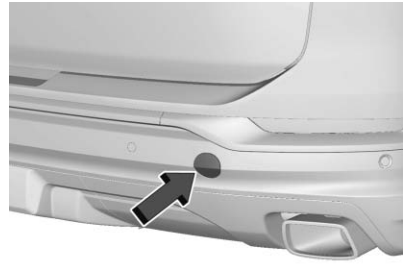

If equipped, carefully open the cover by using the small notch that conceals the rear tow eye socket.

Install the tow eye into the socket by turning it until it stops.

When the tow eye is removed, reinstall the cover with the notch in the original position.

To tow the vehicle behind another vehicle for recreational purposes, such as behind a motor home, see *Recreational Vehicle Towing* ⇨ *339*.

Recreational Vehicle Towing

Recreational vehicle towing means towing the vehicle behind another vehicle – such as behind a motor home. The two most common types of recreational vehicle towing are known as dinghy towing and dolly towing. Dinghy towing is towing the vehicle with all four wheels on the ground. Dolly towing is towing the vehicle with two wheels on the ground and two wheels up on a device known as a dolly.

Here are some important things to consider before recreational vehicle towing:

- The towing capacity of the towing vehicle. Be sure to read the tow vehicle manufacturer's recommendations.
- How far the vehicle will be towed. Some vehicles have restrictions on how far and how long they can tow.
- The proper towing equipment. See your dealer or trailering professional for additional advice and equipment recommendations.
- If the vehicle is ready to be towed. Just as preparing the vehicle for a long trip, make sure the vehicle is prepared to be towed.

Dinghy Towing

Caution

If the vehicle is towed with all four wheels on the ground, the drivetrain components could be damaged. The repairs would not be covered by the vehicle warranty. Do not tow the vehicle with all four wheels on the ground.

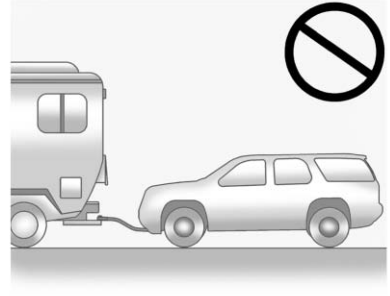

The vehicle was not designed to be towed with all four wheels on the ground. The vehicle may be towed

using a platform trailer with all four wheels off the ground. Some vehicles may be dolly towed. See the following information on dolly towing.

Dolly Towing (All-Wheel-Drive Vehicles)

All-wheel-drive vehicles cannot be towed with two wheels on the ground. To properly tow these vehicles, they should be placed on a platform trailer with all four wheels off of the ground.

Dolly Towing (Front-Wheel-Drive Vehicles)

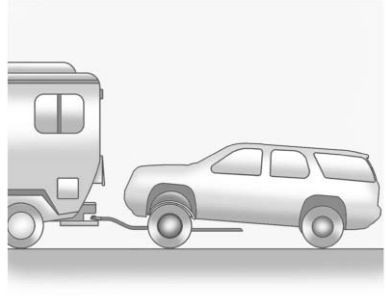

Tow the vehicle with the two rear wheels on the ground and the front wheels on a dolly.

To tow the vehicle from the front with the rear wheels on the ground:

1. Put the front wheels on the dolly.
2. Shift the transmission to P (Park). See *Shifting Into Park* ⇨ *192*.
3. Set the parking brake.
4. Secure the vehicle to the dolly.
5. Follow the dolly manufacturer's instructions for preparing the vehicle and dolly for towing.
6. Release the parking brake.
7. Turn the vehicle off.
8. Open the hood.
9. Wait 2 minutes.
10. Disconnect the negative (-) terminal connector from the 12–volt battery.
11. Close and latch the hood.

Caution

If 105 km/h (65 mph) is exceeded while towing the vehicle, it could be damaged. Never exceed 105 km/h (65 mph) while towing the vehicle.

Towing the Vehicle from the Rear

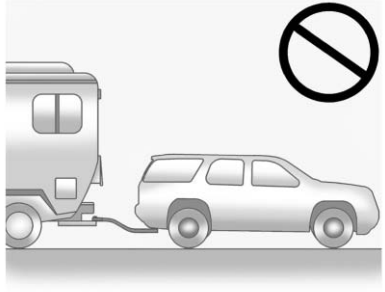

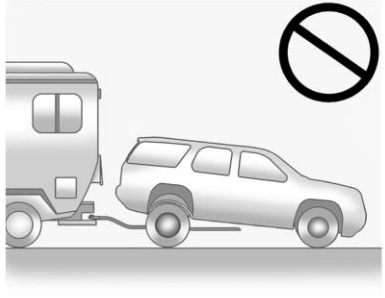

Caution

Towing the vehicle from the rear could damage it. Also, repairs would not be covered by the vehicle warranty. Never have the vehicle towed from the rear.

Appearance Care

Exterior Care

Locks

Locks are lubricated at the factory. Use a de-icing agent only when absolutely necessary, and have the locks greased after using. See *Recommended Fluids and Lubricants* ⇨ *361*.

Washing the Vehicle

To preserve the vehicle's finish, wash it often and out of direct sunlight.

Caution

Do not use petroleum-based, acidic, or abrasive cleaning agents as they can damage the vehicle's paint, metal, or plastic parts. If damage occurs, it would not be covered by the vehicle warranty. Approved cleaning products can be obtained from

(Continued)

Caution (Continued)

your dealer. Follow all manufacturer directions regarding correct product usage, necessary safety precautions, and appropriate disposal of any vehicle care product.

Caution

Avoid using high-pressure washes closer than 30 cm (12 in) to the surface of the vehicle. Use of power washers exceeding 8,274 kPa (1,200 psi) can result in damage or removal of paint and decals.

Caution

Do not power wash any component under the hood that has this symbol.

(Continued)

Caution (Continued)

This could cause damage that would not be covered by the vehicle warranty.

If using an automatic car wash, follow the car wash instructions. The windshield wiper and rear window wiper, if equipped, must be off. Remove any accessories that may be damaged or interfere with the car wash equipment.

Rinse the vehicle well, before washing and after, to remove all cleaning agents completely. If they are allowed to dry on the surface, they could stain.

Dry the finish with a soft, clean chamois or an all-cotton towel to avoid surface scratches and water spotting.

Finish Care

Application of aftermarket clearcoat sealant/wax materials is not recommended. If painted surfaces are damaged, see your dealer to have the damage assessed and repaired. Foreign materials such as calcium chloride and other salts, ice melting agents, road oil and tar, tree sap, bird droppings, chemicals from industrial chimneys, etc., can damage the vehicle's finish if they remain on painted surfaces. Wash the vehicle as soon as possible. If necessary, use non-abrasive cleaners that are marked safe for painted surfaces to remove foreign matter.

Occasional hand waxing or mild polishing should be done to remove residue from the paint finish. See your dealer for approved cleaning products.

Do not apply waxes or polishes to uncoated plastic, vinyl, rubber, decals, simulated wood, or flat paint as damage can occur.

Caution

Machine compounding or aggressive polishing on a basecoat/clearcoat paint finish may damage it. Use only non-abrasive waxes and polishes that are made for a basecoat/clearcoat paint finish on the vehicle.

To keep the paint finish looking new, keep the vehicle garaged or covered whenever possible.

Protecting Exterior Bright Metal Moldings

Caution

Failure to clean and protect the bright metal moldings can result in a hazy white finish or pitting. This damage would not be covered by the vehicle warranty.

The bright metal moldings on the vehicle are aluminum, chrome, or stainless steel. To prevent damage always follow these cleaning instructions:

- Be sure the molding is cool to the touch before applying any cleaning solution.
- Use only approved cleaning solutions for aluminum, chrome, or stainless steel. Some cleaners are highly acidic or contain alkaline substances and can damage the moldings.
- Always dilute a concentrated cleaner according to the manufacturer's instructions.
- Do not use cleaners that are not intended for automotive use.
- Use a nonabrasive wax on the vehicle after washing to protect and extend the molding finish.

Cleaning Exterior Lamps/ Lenses, Emblems, Decals, and Stripes

Use only lukewarm or cold water, a soft cloth, and a car washing soap to clean exterior lamps, lenses, emblems, decals, and stripes. Follow instructions under "Washing the Vehicle" previously in this section.

Lamp covers are made of plastic, and some have a UV protective coating. Do not clean or wipe them when dry.

Do not use any of the following on lamp covers:

- Abrasive or caustic agents
- Washer fluids and other cleaning agents in higher concentrations than suggested by the manufacturer
- Solvents, alcohols, fuels, or other harsh cleaners
- Ice scrapers or other hard items

- Aftermarket appearance caps or covers while the lamps are illuminated, due to excessive heat generated

Caution
Failure to clean lamps properly can cause damage to the lamp cover that would not be covered by the vehicle warranty.

Caution
Using wax on low gloss black finish stripes can increase the gloss level and create a non-uniform finish. Clean low gloss stripes with soap and water only.

Air Intakes

Clear debris from the air intakes, between the hood and windshield, when washing the vehicle.

Shutter System

The vehicle may have a shutter system designed to help increase fuel economy. Keep the shutter system clean for proper operation.

Windshield and Wiper Blades

Clean the outside of the windshield with glass cleaner.

Clean rubber blades using a lint-free cloth or paper towel soaked with windshield washer fluid or a mild detergent. Wash the windshield thoroughly when cleaning the blades. Bugs, road grime, sap, and a buildup of vehicle wash/wax treatments may cause wiper streaking.

Replace the wiper blades if they are worn or damaged. Damage can be caused by extreme dusty conditions, sand, salt, heat, sun, snow, and ice.

Weatherstrips

Apply weatherstrip lubricant to weatherstrips to make them last longer, seal better, and not stick or squeak. Lubricate weatherstrips at least once a year. Hot, dry climates may require more frequent application. Black marks from rubber material on painted surfaces can be removed by rubbing with a clean cloth. See *Recommended Fluids and Lubricants* ⇨ *361*.

Tires

Use a stiff brush with tire cleaner to clean the tires.

Caution

Using petroleum-based tire dressing products on the vehicle may damage the paint finish and/or tires. When applying a tire dressing, always wipe off any overspray from all painted surfaces on the vehicle.

Wheels and Trim — Aluminum or Chrome

Use a soft, clean cloth with mild soap and water to clean the wheels. After rinsing thoroughly with clean water, dry with a soft, clean towel. A wax may then be applied.

Caution

Chrome wheels and other chrome trim may be damaged if the vehicle is not washed after driving on roads that have been sprayed with magnesium, calcium, or sodium chloride. These

(Continued)

Caution (Continued)

chlorides are used on roads for conditions such as ice and dust. Always wash the chrome with soap and water after exposure.

Caution

To avoid surface damage, do not use strong soaps, chemicals, abrasive polishes, cleaners, brushes, or cleaners that contain acid on aluminum or chrome-plated wheels. Use only approved cleaners. Also, never drive a vehicle with aluminum or chrome-plated wheels through an automatic car wash that uses silicone carbide tire cleaning brushes. Damage could occur and the repairs would not be covered by the vehicle warranty.

Brake System

Visually inspect brake lines and hoses for proper attachment, connections, binding, leaks, cracks, chafing, etc. Inspect disc brake pads for wear and rotors for surface condition. Inspect all other brake parts for cracks and leaks.

Steering, Suspension, and Chassis Components

Visually inspect steering, suspension, and chassis components for damaged, loose, or missing parts or signs of wear at least once a year.

Inspect power steering for proper attachment, connections, binding, leaks, cracks, chafing, etc.

Visually check constant velocity joint boots and axle seals for leaks.

Body Component Lubrication

Lubricate all key lock cylinders, hood hinges, liftgate hinges, steel fuel door hinge, and power assist step hinges, unless the components are plastic. Applying silicone grease

on weatherstrips with a clean cloth will make them last longer, seal better, and not stick or squeak.

Underbody Maintenance

At least twice a year, spring and fall, use plain water to flush any corrosive materials from the underbody. Take care to thoroughly clean any areas where mud and other debris can collect.

Do not directly power wash the transfer case and/or front/rear axle output seals. High pressure water can overcome the seals and contaminate the fluid. Contaminated fluid will decrease the life of the transfer case and/or axles and should be replaced.

Sheet Metal Damage

If the vehicle is damaged and requires sheet metal repair or replacement, make sure the body repair shop applies anti-corrosion material to parts repaired or replaced to restore corrosion protection.

Original manufacturer replacement parts will provide the corrosion protection while maintaining the vehicle warranty.

Finish Damage

Quickly repair minor chips and scratches with touch-up materials available from your dealer to avoid corrosion. Larger areas of finish damage can be corrected in your dealer's body and paint shop.

Chemical Paint Spotting

Airborne pollutants can fall upon and attack painted vehicle surfaces causing blotchy, ring-shaped discolorations, and small, irregular dark spots etched into the paint surface. See “Finish Care” previously in this section.

Interior Care

To prevent dirt particle abrasions, regularly clean the vehicle's interior. Immediately remove any soils. Newspapers or dark garments can transfer color to the vehicle’s interior.

Use a soft bristle brush to remove dust from knobs and crevices on the instrument cluster. Using a mild soap solution, immediately remove hand lotions, sunscreen, and insect repellent from all interior surfaces or permanent damage may result.

Use cleaners specifically designed for the surfaces being cleaned to prevent permanent damage. Apply all cleaners directly to the cleaning cloth. Do not spray cleaners on any switches or controls. Remove cleaners quickly.

Before using cleaners, read and follow all safety instructions on the label. While cleaning the interior, open the doors and windows to get proper ventilation.

To prevent damage, do not clean the interior using the following cleaners or techniques:

- Never use a razor or any other sharp object to remove soil from any interior surface.
- Never use a brush with stiff bristles.

- Never rub any surface aggressively or with too much pressure.
- Do not use laundry detergents or dishwashing soaps with degreasers. For liquid cleaners, use approximately 20 drops per 3.8 L (1 gal) of water.
  A concentrated soap solution will create streaks and attract dirt. Do not use solutions that contain strong or caustic soap.
- Do not heavily saturate the upholstery when cleaning.
- Do not use solvents or cleaners containing solvents.

Interior Glass

To clean, use a terry cloth fabric dampened with water. Wipe droplets left behind with a clean dry cloth. If necessary, use a commercial glass cleaner after cleaning with plain water.

Caution

To prevent scratching, never use abrasive cleaners on automotive glass. Abrasive cleaners or aggressive cleaning may damage the rear window defogger.

Cleaning the windshield with water during the first three to six months of ownership will reduce tendency to fog.

Speaker Covers

Vacuum around a speaker cover gently, so that the speaker will not be damaged. Clean spots with water and mild soap.

Coated Moldings

Coated moldings should be cleaned.

- When lightly soiled, wipe with a sponge or soft, lint-free cloth dampened with water.
- When heavily soiled, use warm soapy water.

Fabric/Carpet/Suede

Start by vacuuming the surface using a soft brush attachment. If a rotating vacuum brush attachment is being used, only use it on the floor carpet. Before cleaning, gently remove as much of the soil as possible:

- Gently blot liquids with a paper towel. Continue blotting until no more soil can be removed.
- For solid soils, remove as much as possible prior to vacuuming.

To clean:

1. Saturate a clean, lint-free colorfast cloth with water. Microfiber cloth is recommended to prevent lint transfer to the fabric or carpet.
2. Remove excess moisture by gently wringing until water does not drip from the cleaning cloth.
3. Start on the outside edge of the soil and gently rub toward the center. Fold the cleaning cloth

to a clean area frequently to prevent forcing the soil in to the fabric.

4. Continue gently rubbing the soiled area until there is no longer any color transfer from the soil to the cleaning cloth.
5. If the soil is not completely removed, use a mild soap solution followed only by plain water.

If the soil is not completely removed, it may be necessary to use a commercial upholstery cleaner or spot lifter. Test a small hidden area for colorfastness before using a commercial upholstery cleaner or spot lifter. If ring formation occurs, clean the entire fabric or carpet.

After cleaning, use a paper towel to blot excess moisture.

Cleaning High Gloss Surfaces and Vehicle Information and Radio Displays

Use a microfiber cloth on high gloss surfaces or vehicle displays. First, use a soft bristle brush to remove dirt that can scratch the surface. Then gently clean by rubbing with a microfiber cloth. Never use window cleaners or solvents. Periodically hand wash the microfiber cloth separately, using mild soap. Do not use bleach or fabric softener. Rinse thoroughly and air dry before next use.

Caution

Do not attach a device with a suction cup to the display. This may cause damage and would not be covered by the vehicle warranty.

Instrument Panel, Leather, Vinyl, Other Plastic Surfaces, Low Gloss Paint Surfaces, and Natural Open Pore Wood Surfaces

Use a soft microfiber cloth dampened with water to remove dust and loose dirt. For a more thorough cleaning, use a soft microfiber cloth dampened with a mild soap solution.

Caution

Soaking or saturating leather, especially perforated leather, as well as other interior surfaces, may cause permanent damage. Wipe excess moisture from these surfaces after cleaning and allow them to dry naturally. Never use heat, steam, or spot removers. Do not use cleaners that contain silicone or wax-based products. Cleaners containing these solvents can permanently change

(Continued)

Caution (Continued)

the appearance and feel of leather or soft trim, and are not recommended.

Do not use cleaners that increase gloss, especially on the instrument panel. Reflected glare can decrease visibility through the windshield under certain conditions.

Caution

Use of air fresheners may cause permanent damage to plastics and painted surfaces. If an air freshener comes in contact with any plastic or painted surface in the vehicle, blot immediately and clean with a soft cloth dampened with a mild soap solution. Damage caused by air fresheners would not be covered by the vehicle warranty.

Cargo Cover and Convenience Net

Wash with warm water and mild detergent. Do not use chlorine bleach. Rinse with cold water, and then dry completely.

Care of Seat Belts

Keep belts clean and dry.

⚠ Warning

Do not bleach or dye seat belt webbing. It may severely weaken the webbing. In a crash, they might not be able to provide adequate protection. Clean and rinse seat belt webbing only with mild soap and lukewarm water. Allow the webbing to dry.

Floor Mats

⚠ Warning

If a floor mat is the wrong size or is not properly installed, it can interfere with the pedals. Interference with the pedals can cause unintended acceleration and/or increased stopping distance which can cause a crash and injury. Make sure the floor mat does not interfere with the pedals.

Use the following guidelines for proper floor mat usage.

- The original equipment floor mats were designed for your vehicle. If the floor mats need replacing, it is recommended that GM certified floor mats be purchased. Non-GM floor mats may not fit properly and may interfere with the accelerator or brake pedal. Always check that the floor mats do not interfere with the pedals.

- Do not use a floor mat if the vehicle is not equipped with a floor mat retainer on the driver side floor.
- Use the floor mat with the correct side up. Do not turn it over.
- Do not place anything on top of the driver side floor mat.
- Use only a single floor mat on the driver side.
- Do not place one floor mat on top of another.

Removing and Replacing the Floor Mat

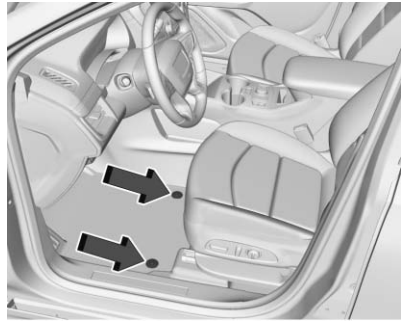

The driver side floor mat is held in place by two retainers.

1. Pull up on the rear of the floor mat to unlock each retainer and remove.
2. Reinstall by lining up the floor mat retainer openings over the carpet retainers and snap into position.
3. Make sure the floor mat is properly secured in place. Verify the floor mat does not interfere with the pedals.

Service and Maintenance

General Information
General Information 351

Maintenance Schedule
Maintenance Schedule 353

Special Application Services
Special Application Services 358

Additional Maintenance and Care
Additional Maintenance and Care 358

Recommended Fluids, Lubricants, and Parts
Recommended Fluids and Lubricants 361
Maintenance Replacement Parts 362

Maintenance Records
Maintenance Records 364

General Information

Your vehicle is an important investment. This section describes the required maintenance for the vehicle. Follow this schedule to help protect against major repair expenses resulting from neglect or inadequate maintenance. It may also help to maintain the value of the vehicle if it is sold. It is the responsibility of the owner to have all required maintenance performed.

Your dealer has trained technicians who can perform required maintenance using genuine replacement parts. They have up-to-date tools and equipment for fast and accurate diagnostics. Many dealers have extended evening and Saturday hours, courtesy transportation, and online scheduling to assist with service needs.

Your dealer recognizes the importance of providing competitively priced maintenance and repair services. With trained technicians, the dealer is the place for routine maintenance such as oil changes and tire rotations and additional maintenance items like tires, brakes, batteries, and wiper blades.

Caution

Damage caused by improper maintenance can lead to costly repairs and may not be covered by the vehicle warranty. Maintenance intervals, checks, inspections, recommended fluids, and lubricants are important to keep the vehicle in good working condition.

Do not have chemical flushes that are not approved by GM performed on the vehicle. The use of flushes, solvents, cleaners, or lubricants that are not approved by GM could damage the vehicle, requiring expensive repairs that are not covered by the vehicle warranty.

The Tire Rotation and Required Services are the responsibility of the vehicle owner. It is recommended to have your dealer perform these services every 12 000 km/7,500 mi. Proper vehicle maintenance helps to keep the vehicle in good working condition, improves fuel economy, and reduces vehicle emissions.

Because of the way people use vehicles, maintenance needs vary. There may need to be more frequent checks and services. The Additional Required Services - Normal are for vehicles that:

- Carry passengers and cargo within recommended limits on the Tire and Loading Information label. See *Vehicle Load Limits* ⇨ *181*.
- Are driven on reasonable road surfaces within legal driving limits.
- Use the recommended fuel. See *Fuel (Gasoline)* ⇨ *236*.

Refer to the information in the Maintenance Schedule Additional Required Services - Normal chart.

The Additional Required Services - Severe are for vehicles that are:

- Mainly driven in heavy city traffic in hot weather
- Mainly driven in hilly or mountainous terrain
- Frequently towing a trailer
- Used for high speed or competitive driving
- Used for taxi, police, or delivery service

Refer to the information in the Maintenance Schedule Additional Required Services - Severe chart.

⚠ Warning

Performing maintenance work can be dangerous and can cause serious injury. Perform maintenance work only if the required information, proper tools, and equipment are available.
If they are not, see your dealer to

(Continued)

Warning (Continued)

have a trained technician do the work. See *Doing Your Own Service Work* ⇨ *261*.

Maintenance Schedule

Owner Checks and Services

At Each Fuel Stop

- Check the engine oil level. See *Engine Oil* ⇨ *269*.

Once a Month

- Check the tire inflation pressures. See *Tire Pressure* ⇨ *307*.
- Inspect the tires for wear. See *Tire Inspection* ⇨ *313*.
- Check the windshield washer fluid level. See *Washer Fluid* ⇨ *282*.

Engine Oil Change

When the CHANGE ENGINE OIL SOON message displays, have the engine oil and filter changed within the next 1 000 km/600 mi. If driven under the best conditions, the engine oil life system may not indicate the need for vehicle service for up to a year. The engine oil and filter must be changed at least once a year and the oil life system must be reset. Your trained dealer technician can perform this work. If the engine oil life system is reset accidentally, service the vehicle within 5 000 km/3,000 mi since the last service. Reset the oil life system when the oil is changed. See *Engine Oil Life System* ⇨ *273*.

On vehicles with diesel engines, it is recommended to drain the diesel fuel filter of water when the oil is changed or when the WATER IN FUEL CONTACT SERVICE message displays.

Tire Rotation and Required Services Every 12 000 km/ 7,500 mi

Rotate the tires, if recommended for the vehicle, and perform the following services. See *Tire Rotation* ⇨ *314*.

- Check engine oil level and oil life percentage. If needed, change engine oil and filter, and reset oil life system. See *Engine Oil* ⇨ *269* and *Engine Oil Life System* ⇨ *273*.
- Check engine coolant level. See *Cooling System* ⇨ *276*.
- Check windshield washer fluid level. See *Washer Fluid* ⇨ *282*.
- Visually inspect windshield wiper blades for wear, cracking, or contamination. See *Exterior Care* ⇨ *341*. Replace worn or damaged wiper blades. See *Wiper Blade Replacement* ⇨ *286*.
- Check tire inflation pressures. See *Tire Pressure* ⇨ *307*.
- Inspect tire wear. See *Tire Inspection* ⇨ *313*.
- Visually check for fluid leaks.
- Inspect engine air cleaner filter. See *Engine Air Cleaner/Filter* ⇨ *274*.
- Inspect brake system. See *Exterior Care* ⇨ *341*.

- Visually inspect steering, suspension, and chassis components for damaged, loose, or missing parts or signs of wear. See *Exterior Care* ⇨ *341*.
- Check restraint system components. See *Safety System Check* ⇨ *75*.
- Visually inspect fuel system for damage or leaks.
- Visually inspect exhaust system and nearby heat shields for loose or damaged parts.
- Lubricate body components. See *Exterior Care* ⇨ *341*.
- Check starter switch. See *Starter Switch Check* ⇨ *285*.
- Check parking brake and automatic transmission park mechanism. See *Park Brake and P (Park) Mechanism Check* ⇨ *286*.
- Check accelerator pedal for damage, high effort, or binding. Replace if needed.
- Visually inspect gas strut for signs of wear, cracks, or other damage. Check the hold open ability of the strut. If the hold open ability is low, service the gas strut. See *Gas Strut(s)* ⇨ *287*.
- Check tire sealant expiration date, if equipped. See *Tire Sealant and Compressor Kit* ⇨ *322*.
- Inspect sunroof track and seal, if equipped. See *Sunroof* ⇨ *53*.

Maintenance Schedule Additional Required Services - Normal	12 000 km/7,500 mi	24 000 km/15,000 mi	36 000 km/22,500 mi	48 000 km/30,000 mi	60 000 km/37,500 mi	72 000 km/45,000 mi	84 000 km/52,500 mi	96 000 km/60,000 mi	108 000 km/67,500 mi	120 000 km/75,000 mi	132 000 km/82,500 mi	144 000 km/90,000 mi	156 000 km/97,500 mi	168 000 km/105,000 mi	180 000 km/112,500 mi	192 000 km/120,000 mi	204 000 km/127,500 mi	216 000 km/135,000 mi	228 000 km/142,500 mi	240 000 km/150,000 mi
Rotate tires and perform Required Services. Check engine oil level and oil life percentage. Change engine oil and filter, if needed. Drain the diesel fuel filter of water. (Diesel Only)	✓	✓	✓	✓	✓	✓	✓	✓	✓	✓	✓	✓	✓	✓	✓	✓	✓	✓	✓	✓
Replace passenger compartment air filter. (1)			✓			✓			✓			✓			✓			✓		
Inspect evaporative control system. (2)						✓						✓						✓		
Diesel Engine Only: Replace fuel filter. (3)				✓				✓				✓				✓				✓
Replace engine air cleaner filter. (4)						✓						✓						✓		
Replace spark plugs. Inspect spark plug wires.								✓								✓				
Drain and fill engine cooling system. (5)																				✓
Visually inspect accessory drive belts. (6)																				✓
Replace brake fluid. (7)																				

Footnotes — Maintenance Schedule Additional Required Services - Normal

(1) Or every two years, whichever comes first. More frequent passenger compartment air filter replacement may be needed if driving in areas with heavy traffic, poor air quality, high dust levels, or environmental allergens. Passenger compartment air filter replacement may also be needed if there is reduced airflow, window fogging, or odors. Your GM dealer can help determine when to replace the filter.

(2) Visually check all fuel and vapor lines and hoses for proper attachment, connection, routing, and condition.

(3) Or as indicated by the Driver Information Center (DIC) or two years whichever comes first. The fuel filter may need to be

replaced more often based on biodiesel usage, driving in climates with severe dust, off-road driving, or towing a trailer for extended periods.

(4) Or every four years, whichever comes first. If driving in dusty conditions, inspect the filter at each oil change or more often as needed.

(5) Or every five years, whichever comes first. See *Cooling System* ⇨ *276*.

(6) Or every 10 years, whichever comes first. Inspect for fraying, excessive cracking, or damage; replace, if needed.

(7) Replace brake fluid every five years. See *Brake Fluid* ⇨ *283*.

Maintenance Schedule Additional Required Services - Severe	12 000 km/7,500 mi	24 000 km/15,000 mi	36 000 km/22,500 mi	48 000 km/30,000 mi	60 000 km/37,500 mi	72 000 km/45,000 mi	84 000 km/52,500 mi	96 000 km/60,000 mi	108 000 km/67,500 mi	120 000 km/75,000 mi	132 000 km/82,500 mi	144 000 km/90,000 mi	156 000 km/97,500 mi	168 000 km/105,000 mi	180 000 km/112,500 mi	192 000 km/120,000 mi	204 000 km/127,500 mi	216 000 km/135,000 mi	228 000 km/142,500 mi	240 000 km/150,000 mi
Rotate tires and perform Required Services. Check engine oil level and oil life percentage. Change engine oil and filter, if needed. Drain the diesel fuel filter of water. (Diesel Only)	✓	✓	✓	✓	✓	✓	✓	✓	✓	✓	✓	✓	✓	✓	✓	✓	✓	✓	✓	✓
Replace passenger compartment air filter. (1)			✓			✓			✓			✓			✓			✓		
Inspect evaporative control system. (2)						✓						✓						✓		
Diesel Engine Only: Replace fuel filter. (3)				✓				✓				✓				✓				✓
Replace engine air cleaner filter. (4)						✓						✓						✓		
Change automatic transmission fluid.						✓						✓						✓		
Replace spark plugs. Inspect spark plug wires.								✓								✓				
Drain and fill engine cooling system. (5)																				✓
Visually inspect accessory drive belts. (6)																				✓
Replace brake fluid. (7)																				

Footnotes — Maintenance Schedule Additional Required Services - Severe

(1) Or every two years, whichever comes first. More frequent passenger compartment air filter replacement may be needed if driving in areas with heavy traffic, poor air quality, high dust levels, or environmental allergens. Passenger compartment air filter replacement may also be needed if there is reduced airflow, window fogging, or odors. Your GM dealer can help determine when to replace the filter.

(2) Visually check all fuel and vapor lines and hoses for proper attachment, connection, routing, and condition.

(3) Or as indicated by the Driver Information Center (DIC) or two years whichever comes first. The fuel filter may need to be replaced more often based on biodiesel usage, driving in climates with severe dust, off-road driving, or towing a trailer for extended periods.

(4) Or every four years, whichever comes first. If driving in dusty conditions, inspect the filter at each oil change or more often as needed.

(5) Or every five years, whichever comes first. See *Cooling System* ⇨ *276*.

(6) Or every 10 years, whichever comes first. Inspect for fraying, excessive cracking, or damage; replace, if needed.

(7) Replace brake fluid every five years. See *Brake Fluid* ⇨ *283*.

Special Application Services

- Severe Commercial Use Vehicles Only: Lubricate chassis components every oil change.
- Have underbody flushing service performed. See "Underbody Maintenance" in *Exterior Care* ⇨ *341*.

Additional Maintenance and Care

Your vehicle is an important investment and caring for it properly may help to avoid future costly repairs. To maintain vehicle performance, additional maintenance services may be required.

It is recommended that your dealer perform these services — their trained dealer technicians know your vehicle best. Your dealer can also perform a thorough assessment with a multi-point inspection to recommend when your vehicle may need attention.

The following list is intended to explain the services and conditions to look for that may indicate services are required.

Battery

The 12-volt battery supplies power to start the engine and operate any additional electrical accessories.

- To avoid break-down or failure to start the vehicle, maintain a battery with full cranking power.
- Trained dealer technicians have the diagnostic equipment to test the battery and ensure that the connections and cables are corrosion-free.

Belts

- Belts may need replacing if they squeak or show signs of cracking or splitting.
- Trained dealer technicians have access to tools and equipment to inspect the belts and recommend adjustment or replacement when necessary.

Brakes

Brakes stop the vehicle and are crucial to safe driving.

- Signs of brake wear may include chirping, grinding, or squealing noises, or difficulty stopping.
- Trained dealer technicians have access to tools and equipment to inspect the brakes and recommend quality parts engineered for the vehicle.

Fluids

Proper fluid levels and approved fluids protect the vehicle's systems and components. See *Recommended Fluids and Lubricants* ⇨ *361* for GM approved fluids.

- Engine oil and windshield washer fluid levels should be checked at every fuel fill.
- Instrument cluster lights may come on to indicate that fluids may be low and need to be filled.

Hoses

Hoses transport fluids and should be regularly inspected to ensure that there are no cracks or leaks. With a multi-point inspection, your dealer can inspect the hoses and advise if replacement is needed.

Lamps

Properly working headlamps, taillamps, and brake lamps are important to see and be seen on the road.

- Signs that the headlamps need attention include dimming, failure to light, cracking, or damage. The brake lamps need to be checked periodically to ensure that they light when braking.
- With a multi-point inspection, your dealer can check the lamps and note any concerns.

Shocks and Struts

Shocks and struts help aid in control for a smoother ride.

- Signs of wear may include steering wheel vibration, bounce/sway while braking, longer stopping distance, or uneven tire wear.
- As part of the multi-point inspection, trained dealer technicians can visually inspect the shocks and struts for signs

of leaking, blown seals, or damage, and can advise when service is needed.

Tires

Tires need to be properly inflated, rotated, and balanced. Maintaining the tires can save money and fuel, and can reduce the risk of tire failure.

- Signs that the tires need to be replaced include three or more visible treadwear indicators; cord or fabric showing through the rubber; cracks or cuts in the tread or sidewall; or a bulge or split in the tire.
- Trained dealer technicians can inspect and recommend the right tires. Your dealer can also provide tire/wheel balancing services to ensure smooth vehicle operation at all speeds. Your dealer sells and services name brand tires.

Vehicle Care

To help keep the vehicle looking like new, vehicle care products are available from your dealer. For information on how to clean and protect the vehicle's interior and exterior, see *Interior Care* ⇨ *346* and *Exterior Care* ⇨ *341*.

Wheel Alignment

Wheel alignment is critical for ensuring that the tires deliver optimal wear and performance.

- Signs that the alignment may need to be adjusted include pulling, improper vehicle handling, or unusual tire wear.
- Your dealer has the required equipment to ensure proper wheel alignment.

Windshield

For safety, appearance, and the best viewing, keep the windshield clean and clear.

- Signs of damage include scratches, cracks, and chips.
- Trained dealer technicians can inspect the windshield and recommend proper replacement if needed.

Wiper Blades

Wiper blades need to be cleaned and kept in good condition to provide a clear view.

- Signs of wear include streaking, skipping across the windshield, and worn or split rubber.
- Trained dealer technicians can check the wiper blades and replace them when needed.

Recommended Fluids, Lubricants, and Parts

Recommended Fluids and Lubricants

Usage	Fluid/Lubricant
Automatic Transmission	DEXRON-VI Automatic Transmission Fluid.
Diesel Exhaust Aftertreatment System	Diesel Exhaust Fluid (GM Part No. 19286291, in Canada 88865751) or diesel exhaust fluid that meets ISO 22241-1 or displays the API Diesel Exhaust Fluid Certification Mark.
Engine Coolant	50/50 mixture of clean, drinkable water and use only DEX-COOL Coolant. See *Cooling System* ⇨ *276*.
Engine Oil (Diesel)	Engine oil meeting the dexos2 specification of the proper SAE viscosity grade. ACDelco dexos2 is recommended. See *Engine Oil* ⇨ *269*.
Engine Oil (Gasoline)	Engine oil meeting the dexos1 specification of the proper SAE viscosity grade. ACDelco dexos1 full synthetic is recommended. See *Engine Oil* ⇨ *269*.
Hood and Door Hinges	Multi-Purpose Lubricant, Superlube (GM Part No. 12346241, in Canada 10953474).
Hood Latch Assembly, Secondary Latch, Pivots, Spring Anchor, and Release Pawl	Lubriplate Lubricant Aerosol (GM Part No. 89021668, in Canada 89021674) or lubricant meeting requirements of NLGI #2, Category LB or GC-LB.
Hydraulic Brake System	DOT 3 Hydraulic Brake Fluid (GM Part No. 19353126, in Canada 19299819).
Transfer Case (All-Wheel Drive)	Transfer Case Fluid (GM Part No. 88900401, in Canada 89021678).

Usage	Fluid/Lubricant
Weatherstrip Conditioning	Weatherstrip Lubricant (GM Part No. 3634770, in Canada 10953518) or equivelant.
Windshield Washer	Automotive windshield washer fluid that meets regional freeze protection requirements.

Maintenance Replacement Parts

Replacement parts identified below by name, part number, or specification can be obtained from your dealer.

Part	GM Part Number	ACDelco Part Number
Engine Air Cleaner/Filter	23279657	A3226C
Engine Oil Filter		
1.5L L4 Gas Engine	12640445	PF64
1.6L L4 Diesel Engine	55588497	PF2264G
2.0L L4 Gas Engine	12640445	PF64
Fuel Filter		
1.6L L4 Diesel Engine	84186990	TP1016
Passenger Compartment Air Filter	13508023	CF185
Spark Plugs		
1.5L L4 Gas Engine	12673527	41-153

Part	GM Part Number	ACDelco Part Number
2.0L L4 Gas Engine	12647827	41-125
Wiper Blades		
Driver Side – 60 cm (23.6 in)	23368186	—
Passenger Side – 45.0 cm (17.7 in)	23353587	—
Rear – 30.0 cm (11.8 in)	84215609	—

Maintenance Records

After the scheduled services are performed, record the date, odometer reading, who performed the service, and the type of services performed in the boxes provided. Retain all maintenance receipts.

Date	Odometer Reading	Serviced By	Services Performed

Technical Data

Vehicle Identification
Vehicle Identification Number (VIN) 365
Service Parts Identification Label 365

Vehicle Data
Capacities and Specifications 366
Engine Drive Belt Routing 368

Vehicle Identification

Vehicle Identification Number (VIN)

This legal identifier is in the front corner of the instrument panel, on the driver side of the vehicle. It can be seen through the windshield from outside. The Vehicle Identification Number (VIN) also appears on the Vehicle Certification and Service Parts labels and certificates of title and registration.

Engine Identification

The eighth character in the VIN is the engine code. This code identifies the vehicle's engine, specifications, and replacement parts. See “Engine Specifications” under *Capacities and Specifications* ⇨ *366* for the vehicle's engine code.

Service Parts Identification Label

There may be a label on the inside of the glove box that contains the following information:

- Vehicle Identification Number (VIN)
- Model designation
- Paint information
- Production options and special equipment

If there is no label, there is a barcode on the certification label on the center (B) pillar to scan for this same information.

Vehicle Data

Capacities and Specifications

Application	Capacities	
	Metric	English
Air Conditioning Refrigerant	For the air conditioning system refrigerant type and charge amount, see the refrigerant label under the hood. See your dealer for more information.	
Engine Cooling System		
1.5L L4 Gas Engine	6.6 L	7.0 qt
1.6L L4 Diesel Engine	7.5 L	7.9 qt
2.0L L4 Gas Engine	7.8 L	8.2 qt
Engine Oil with Filter		
1.5L L4 Gas Engine AWD	5.0 L	5.3 qt
1.5L L4 Gas Engine FWD	4.0 L	4.2 qt
1.6L L4 Diesel Engine	5.0 L	5.3 qt
2.0L L4 Gas Engine AWD	5.7 L	6.0 qt
2.0L L4 Gas Engine FWD	4.7 L	5.0 qt
Fuel Tank		
FWD	56.0 L	14.8 gal

Application	Capacities	
	Metric	English
AWD	59.0 L	15.6 gal
Transfer Case Fluid	0.8 L	0.85 qt
Wheel Nut Torque	140 N•m	100 lb ft
All capacities are approximate. When adding, be sure to fill to the approximate level, as recommended in this manual. Recheck fluid level after filling.		

Engine Specifications

Engine	VIN Code	Transmission	Spark Plug Gap
1.5L L4 Gas Engine	V	Automatic	0.60–0.70 mm (0.024–0.028 in)
1.6L L4 Diesel Engine	U	Automatic	—
2.0L L4 Gas Engine	X	Automatic	0.75–0.90 mm (0.030–0.035 in)

Engine Drive Belt Routing

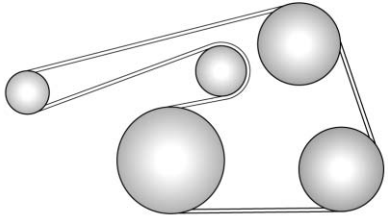

1.5L L4 Gas Engine

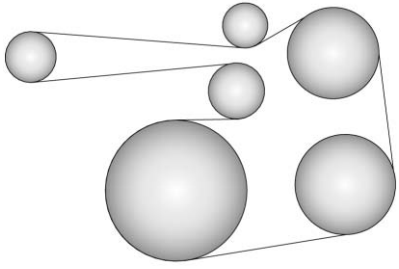

1.6L L4 Diesel Engine

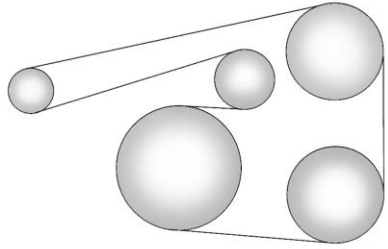

2.0L L4 Gas Engine

Customer Information

Customer Information
Customer Satisfaction Procedure 369
Customer Assistance Offices 371
Customer Assistance for Text Telephone (TTY) Users 372
Online Owner Center 372
GM Mobility Reimbursement Program 373
Roadside Assistance Program 373
Scheduling Service Appointments 375
Courtesy Transportation Program 375
Collision Damage Repair 376
Service Publications Ordering Information 378
Radio Frequency Statement 379

Reporting Safety Defects
Reporting Safety Defects to the United States Government 379
Reporting Safety Defects to the Canadian Government 380
Reporting Safety Defects to General Motors 380

Vehicle Data Recording and Privacy
Vehicle Data Recording and Privacy 381
Event Data Recorders 381
OnStar 382
Infotainment System 382

Customer Information

Customer Satisfaction Procedure

Your satisfaction and goodwill are important to your dealer and to GMC. Normally, any concerns with the sales transaction or the operation of the vehicle will be resolved by your dealer's sales or service departments. Sometimes, however, despite the best intentions of all concerned, misunderstandings can occur. If your concern has not been resolved to your satisfaction, the following steps should be taken:

STEP ONE : Discuss your concern with a member of dealership management. Normally, concerns can be quickly resolved at that level. If the matter has already been reviewed with the sales, service, or parts manager, contact the owner of your dealership or the general manager.

STEP TWO : If after contacting a member of dealership management, it appears your concern cannot be

resolved by your dealership without further help, in the U.S., call 1-800-462-8782. In Canada, call General Motors of Canada Customer Care Centre at 1-800-263-3777 (English), or 1-800-263-7854 (French).

We encourage you to call the toll-free number in order to give your inquiry prompt attention. Have the following information available to give the Customer Assistance representative:

- Vehicle Identification Number (VIN). This is available from the vehicle registration or title, or the plate at the top left of the instrument panel and visible through the windshield.
- Dealership name and location.
- Vehicle delivery date and present mileage.

When contacting GMC, remember that your concern will likely be resolved at a dealer's facility. That is why we suggest following Step One first.

STEP THREE — U.S. Owners : Both General Motors and your dealer are committed to making sure you are completely satisfied with your new vehicle. However, if you continue to remain unsatisfied after following the procedure outlined in Steps One and Two, you can file with the Better Business Bureau (BBB) Auto Line Program to enforce your rights.

The BBB Auto Line Program is an out-of-court program administered by the Council of Better Business Bureaus to settle automotive disputes regarding vehicle repairs or the interpretation of the New Vehicle Limited Warranty. Although you may be required to resort to this informal dispute resolution program prior to filing a court action, use of the program is free of charge and your case will generally be heard within 40 days. If you do not agree with the decision given in your case, you may reject it and proceed with any other venue for relief available to you.

You may contact the BBB Auto Line Program using the toll-free telephone number or write them at the following address:

BBB Auto Line Program
Council of Better Business Bureaus, Inc.
3033 Wilson Blvd.
Suite 600
Arlington, VA 22201

Telephone: 1-800-955-5100
http://www.bbb.org/council/programs-services/dispute-handling-and-resolution/bbb-auto-line

This program is available in all 50 states and the District of Columbia. Eligibility is limited by vehicle age, mileage, and other factors. General Motors reserves the right to change eligibility limitations and/or discontinue its participation in this program.

STEP THREE — Canadian Owners : In the event that you do not feel your concerns have been addressed after following the procedure outlined in Steps One

and Two, General Motors of Canada Company wants you to be aware of its participation in a no-charge Mediation/Arbitration Program. General Motors of Canada Company has committed to binding arbitration of owner disputes involving factory-related vehicle service claims. The program provides for the review of the facts involved by an impartial third party arbiter, and may include an informal hearing before the arbiter. The program is designed so that the entire dispute settlement process, from the time you file your complaint to the final decision, should be completed in about 70 days. We believe our impartial program offers advantages over courts in most jurisdictions because it is informal, quick, and free of charge.

For further information concerning eligibility in the Canadian Motor Vehicle Arbitration Plan (CAMVAP), call toll-free 1-800-207-0685, or call the General Motors Customer Care Centre, 1-800-263-3777 (English), 1-800-263-7854 (French), or write to:

Mediation/Arbitration Program
c/o Customer Care Centre
General Motors of Canada Company
Mail Code: CA1-163-005
1908 Colonel Sam Drive
Oshawa, Ontario L1H 8P7

Your inquiry should be accompanied by the Vehicle Identification Number (VIN).

Customer Assistance Offices

GMC encourages customers to call the toll-free number for assistance. However, if a customer wishes to write or e-mail GMC, the letter should be addressed to:

United States and Puerto Rico

GMC Customer Assistance Center
P.O. Box 33172
Detroit, MI 48232-5172

www.GMC.com

1-800-GMC-8782 (1-800-462-8782)
1-888-889-2438 (For Text Telephone devices (TTYs))
Roadside Assistance:
1-888-881-3302

From U.S. Virgin Islands:

1-800-496-9994

Canada

General Motors of Canada Company
Customer Care Centre, Mail Code: CA1-163-005
1908 Colonel Sam Drive
Oshawa, Ontario L1H 8P7
www.gmc.ca

1-800-263-3777 (English)
1-800-263-7854 (French)
1-800-263-3830 (For Text Telephone Devices (TTYs))
Roadside Assistance:
1-800-268-6800

Overseas

Please contact the local General Motors Business Unit.

Customer Assistance for Text Telephone (TTY) Users

To assist customers who are deaf, hard of hearing, or speech-impaired and who use Text Telephones (TTYs), GMC has TTY equipment available at its Customer Assistance Center. Any TTY user in the U.S. can communicate with GMC by dialing: 1-888-889-2438. TTY users in Canada can dial 1-800-263-3830.

Online Owner Center

Online Owner Experience (U.S.) my.gmc.com

The GMC online owner experience is a one-stop resource that allows interaction with GMC and keeps important vehicle-specific information in one place.

Membership Benefits

: Download owner's manuals and view vehicle-specific how-to videos.

: View maintenance schedules, alerts, and OnStar onboard vehicle diagnostic information. Schedule service appointments.

: View and print dealer-recorded service records and self-recorded service records.

: Select a dealer and view locations, maps, phone numbers, and hours.

: Track your vehicle's warranty information.

: View active recalls by Vehicle Identification Number (VIN). See *Vehicle Identification Number (VIN)* ⇨ *365*.

: View GM Card, SiriusXM Satellite radio (if equipped), and OnStar account information (if equipped).

: Chat live with online help representatives.

See my.gmc.com to register your vehicle.

GMC Centre (Canada) gmc.ca

Take a trip to the GMC Centre:

- Chat live with online help representatives.
- Use the Vehicle Tools section.
- Access third party enthusiast sites and social media networks.
- Locate resources such as lease-end, financing, and warranty information.
- Retrieve your favorite articles, quizzes, tips, and multimedia galleries organized into the Features and Auto Care Sections.
- Download the owner's manual for your vehicle, quickly and easily.
- Find the GMC-recommended maintenance services for your vehicle.

GM Mobility Reimbursement Program

GENERAL MOTORS MOBILITY

This program is available to qualified applicants for cost reimbursement, up to certain limits, of eligible aftermarket adaptive equipment required for the vehicle, such as hand controls or a wheelchair/scooter lift for the vehicle.

To learn about the GM Mobility program, see www.gmmobility.com or call the GM Mobility Assistance Center at 1-800-323-9935. Text Telephone (TTY) users, call 1-800-833-9935.

General Motors of Canada also has a Mobility program. See www.gm.ca or call 1-800-GM-DRIVE (800-463-7483) for details. TTY users call 1-800-263-3830.

Roadside Assistance Program

For U.S.-purchased vehicles, call 1-888-881-3302; (Text Telephone (TTY): 1-888-889-2438).

For Canadian-purchased vehicles, call 1-800-268-6800.

Service is available 24 hours a day, 365 days a year.

Calling for Assistance

When calling Roadside Assistance, have the following information ready:

- Your name, home address, and home telephone number
- Telephone number of your location
- Location of the vehicle
- Model, year, color, and license plate number of the vehicle
- Odometer reading, Vehicle Identification Number (VIN), and delivery date of the vehicle
- Description of the problem

Coverage

Services are provided for the duration of the vehicle's powertrain warranty.

In the U.S., anyone driving the vehicle is covered. In Canada, a person driving the vehicle without permission from the owner is not covered.

Roadside Assistance is not a part of the New Vehicle Limited Warranty. General Motors North America and GMC reserve the right to make any changes or discontinue the Roadside Assistance program at any time without notification.

General Motors North America and GMC reserve the right to limit services or payment to an owner or driver if they decide the claims are made too often, or the same type of claim is made many times.

Services Provided

- **Emergency Fuel Delivery:** Delivery of enough fuel for the vehicle to get to the nearest service station.

- **Lock-Out Service:** Service to unlock the vehicle if you are locked out. A remote unlock may be available if you have OnStar. For security reasons, the driver must present identification before this service is given.
- **Emergency Tow from a Public Road or Highway:** Tow to the nearest GMC dealer for warranty service, or if the vehicle was in a crash and cannot be driven. Assistance is not given when the vehicle is stuck in the sand, mud, or snow.
- **Flat Tire Change:** Service to change a flat tire with the spare tire. The spare tire, if equipped, must be in good condition and properly inflated. It is the owner's responsibility for the repair or replacement of the tire if it is not covered by the warranty.
- **Battery Jump Start:** Service to jump start a dead battery.
- **Trip Interruption Benefits and Assistance:** If your trip is interrupted due to a warranty event, incidental expenses may be reimbursed within the Powertrain warranty period. Items considered are reasonable and customary hotel, meals, rental car, or a vehicle being delivered back to the customer, up to 500 miles.

Services Not Included in Roadside Assistance

- Impound towing caused by violation of any laws
- Legal fines
- Mounting, dismounting, or changing of snow tires, chains, or other traction devices

Service is not provided if a vehicle is in an area that is not accessible to the service vehicle or is not a regularly traveled or maintained public road, which includes ice and winter roads. Off-road use is not covered.

Services Specific to Canadian-Purchased Vehicles

- **Fuel Delivery:** Reimbursement is up to 7 L. Diesel fuel delivery may be restricted. Propane and other fuels are not provided through this service.
- **Lock-Out Service:** Vehicle registration is required.
- **Trip Interruption Benefits and Assistance:** Must be over 150 km from where your trip was started to qualify. Pre-authorization, original detailed receipts, and a copy of the repair orders are required. Once authorization has been received, the Roadside Assistance advisor will help to make arrangements and explain how to receive payment.
- **Alternative Service:** If assistance cannot be provided right away, the Roadside Assistance advisor may give permission to get local emergency road service. You will receive payment, up to $100,

after sending the original receipt to Roadside Assistance. Mechanical failures may be covered, however any cost for parts and labor for repairs not covered by the warranty are the owner responsibility.

Scheduling Service Appointments

When the vehicle requires warranty service, contact your dealer and request an appointment. By scheduling a service appointment and advising the service consultant of your transportation needs, your dealer can help minimize your inconvenience.

If the vehicle cannot be scheduled into the service department immediately, keep driving it until it can be scheduled for service, unless, of course, the problem is safety related. If it is, please call your dealership, let them know this, and ask for instructions.

If your dealer requests you to bring the vehicle for service, you are urged to do so as early in the work day as possible to allow for same-day repair.

Courtesy Transportation Program

To enhance your ownership experience, we and our participating dealers are proud to offer Courtesy Transportation, a customer support program for vehicles with the Bumper-to-Bumper (Base Warranty Coverage period in Canada), extended powertrain, and/or hybrid-specific warranties in both the U.S. and Canada.

Several Courtesy Transportation options are available to assist in reducing inconvenience when warranty repairs are required.

Courtesy Transportation is not a part of the New Vehicle Limited Warranty. A separate booklet entitled “Limited Warranty and Owner Assistance Information” furnished with each new vehicle provides detailed warranty coverage information.

Transportation Options

Warranty service can generally be completed while you wait. However, if you are unable to do so, your dealer may offer the following transportation options:

Shuttle Service

This includes one-way or round-trip shuttle service within reasonable time and distance parameters of your dealer's area.

Public Transportation or Fuel Reimbursement

If overnight warranty repairs are needed, and public transportation is used, the expense must be supported by original receipts and within the maximum amount allowed by GM for shuttle service. If U.S. customers arrange their own transportation, limited reimbursement for reasonable fuel expenses may be available. Claim amounts should reflect actual costs

and be supported by original receipts. See your dealer for information.

Courtesy Rental Vehicle

For an overnight warranty repair, the dealer may provide an available courtesy rental vehicle or provide for reimbursement of a rental vehicle. Reimbursement is limited and must be supported by original receipts as well as a signed and completed rental agreement and meet state/provincial, local, and rental vehicle provider requirements. Requirements vary and may include minimum age requirements, insurance coverage, credit card, etc. Additional fees such as fuel usage charges, taxes, levies, usage fees, excessive mileage, or rental usage beyond the completion of the repair are also your responsibility.

It may not be possible to provide a like vehicle as a courtesy rental.

Additional Program Information

All program options, such as shuttle service, may not be available at every dealer. Contact your dealer for specific availability.

General Motors reserves the right to unilaterally modify, change, or discontinue Courtesy Transportation at any time and to resolve all questions of claim eligibility pursuant to the terms and conditions described herein at its sole discretion.

Collision Damage Repair

If the vehicle is involved in a collision and it is damaged, have the damage repaired by a qualified technician using the proper equipment and quality replacement parts. Poorly performed collision repairs diminish the vehicle resale value, and safety performance can be compromised in subsequent collisions.

Collision Parts

Genuine GM Collision parts are new parts made with the same materials and construction methods as the parts with which the vehicle was originally built. Genuine GM Collision parts are the best choice to ensure that the vehicle's designed appearance, durability, and safety are preserved. The use of Genuine GM parts can help maintain the GM New Vehicle Limited Warranty.

Recycled original equipment parts may also be used for repair. These parts are typically removed from vehicles that were total losses in prior crashes. In most cases, the parts being recycled are from undamaged sections of the vehicle. A recycled original equipment GM part may be an acceptable choice to maintain the vehicle's originally designed appearance and safety performance; however, the history of these parts is not known. Such parts are not covered by the GM New Vehicle Limited Warranty, and any related failures are not covered by that warranty.

Aftermarket collision parts are also available. These are made by companies other than GM and may not have been tested for the vehicle. As a result, these parts may fit poorly, exhibit premature durability/corrosion problems, and may not perform properly in subsequent collisions. Aftermarket parts are not covered by the GM New Vehicle Limited Warranty, and any vehicle failure related to such parts is not covered by that warranty.

Repair Facility

GM also recommends that you choose a collision repair facility that meets your needs before you ever need collision repairs. Your dealer may have a collision repair center with GM-trained technicians and state-of-the-art equipment, or be able to recommend a collision repair center that has GM-trained technicians and comparable equipment.

Insuring the Vehicle

Protect your investment in the GM vehicle with comprehensive and collision insurance coverage. There are significant differences in the quality of coverage afforded by various insurance policy terms. Many insurance policies provide reduced protection to the GM vehicle by limiting compensation for damage repairs through the use of aftermarket collision parts. Some insurance companies will not specify aftermarket collision parts. When purchasing insurance, we recommend that you ensure that the vehicle will be repaired with GM original equipment collision parts. If such insurance coverage is not available from your current insurance carrier, consider switching to another insurance carrier.

If the vehicle is leased, the leasing company may require you to have insurance that ensures repairs with Genuine GM Original Equipment Manufacturer (OEM) parts or Genuine Manufacturer replacement parts. Read the lease carefully, as you may be charged at the end of the lease for poor quality repairs.

If a Crash Occurs

If there has been an injury, call emergency services for help. Do not leave the scene of a crash until all matters have been taken care of. Move the vehicle only if its position puts you in danger, or you are instructed to move it by a police officer.

Give only the necessary information to police and other parties involved in the crash.

For emergency towing see *Roadside Assistance Program* ⇨ *373*.

Gather the following information:

- Driver name, address, and telephone number
- Driver license number
- Owner name, address, and telephone number
- Vehicle license plate number

- Vehicle make, model, and model year
- Vehicle Identification Number (VIN)
- Insurance company and policy number
- General description of the damage to the other vehicle

Choose a reputable repair facility that uses quality replacement parts. See “Collision Parts” earlier in this section.

If the airbag has inflated, see *What Will You See after an Airbag Inflates?* ⇨ *81*.

Managing the Vehicle Damage Repair Process

In the event that the vehicle requires damage repairs, GM recommends that you take an active role in its repair. If you have a pre-determined repair facility of choice, take the vehicle there, or have it towed there. Specify to the facility that any required replacement collision parts be original equipment parts, either new Genuine GM parts or recycled original GM parts. Remember, recycled parts will not be covered by the GM vehicle warranty.

Insurance pays the bill for the repair, but you must live with the repair. Depending on your policy limits, your insurance company may initially value the repair using aftermarket parts. Discuss this with the repair professional, and insist on Genuine GM parts. Remember, if the vehicle is leased, you may be obligated to have the vehicle repaired with Genuine GM parts, even if your insurance coverage does not pay the full cost.

If another party's insurance company is paying for the repairs, you are not obligated to accept a repair valuation based on that insurance company's collision policy repair limits, as you have no contractual limits with that company. In such cases, you can have control of the repair and parts choices as long as the cost stays within reasonable limits.

Service Publications Ordering Information

Service Manuals

Service Manuals have the diagnosis and repair information on the engines, transmission, axle, suspension, brakes, electrical, steering, body, etc.

Owner Information

Owner publications are written specifically for owners and intended to provide basic operational information about the vehicle. The Owner’s Manual includes the Maintenance Schedule for all models.

In-Portfolio: Includes a Portfolio, Owner’s Manual, and Warranty Manual.

RETAIL SELL PRICE: $35.00 – $40.00 (U.S.) plus handling and shipping fees.

Without Pouch: Owner’s Manual only.

RETAIL SELL PRICE:
$25.00 (U.S.) plus handling and shipping fees.

Current and Past Models

Service and Owner publications are available for many current and past model year GM vehicles.

ORDER TOLL FREE:
1-800-551-4123 Monday – Friday 8:00 AM – 6:00 PM Eastern Time

For Credit Card Orders Only (VISA-MasterCard-Discover), see Helm, Inc. at: www.helminc.com.

Or write to:

Helm, Incorporated
Attention: Customer Service
47911 Halyard Drive
Plymouth, MI 48170

Prices are subject to change without notice and without incurring obligation. Allow ample time for delivery.

All listed prices are quoted in U.S. funds. Make checks payable in U.S. funds.

Radio Frequency Statement

This vehicle has systems that operate on a radio frequency that complies with Part 15/Part 18 of the Federal Communications Commission (FCC) rules and with Innovation, Science and Economic Development (ISED) Canada's RSP-100 / license-exempt RSS's / ICES-001.

Operation is subject to the following two conditions:

1. The device may not cause harmful interference.
2. The device must accept any interference received, including interference that may cause undesired operation of the device.

Changes or modifications to any of these systems by other than an authorized service facility could void authorization to use this equipment.

Reporting Safety Defects

Reporting Safety Defects to the United States Government

If you believe that your vehicle has a defect which could cause a crash or could cause injury or death, you should immediately inform the National Highway Traffic Safety Administration (NHTSA) in addition to notifying General Motors.

If NHTSA receives similar complaints, it may open an investigation, and if it finds that a safety defect exists in a group of vehicles, it may order a recall and remedy campaign. However, NHTSA cannot become involved in individual problems between you, your dealer, or General Motors.

To contact NHTSA, you may call the Vehicle Safety Hotline toll-free at 1-888-327-4236 (TTY: 1-800-424-9153); go to *http://www.safercar.gov;* or write to:

Administrator, NHTSA
1200 New Jersey Avenue, S.E.
Washington, D.C. 20590

You can also obtain other information about motor vehicle safety from *http://www.safercar.gov*.

Reporting Safety Defects to the Canadian Government

If you live in Canada, and you believe that the vehicle has a safety defect, notify Transport Canada immediately, and notify General Motors of Canada Company. Call Transport Canada at 1-800-333-0510; go to:

www.tc.gc.ca/recalls (English)

www.tc.gc.ca/rappels (French)

or write to:

Transport Canada
Motor Vehicle Safety Directorate
Defect Investigations and Recalls Division
80 Noel Street
Gatineau, QC J8Z 0A1

Reporting Safety Defects to General Motors

In addition to notifying NHTSA (or Transport Canada) in a situation like this, notify General Motors.

Call 1-800-GMC-8782 (1-800-462-8782), or write:

GMC Customer Assistance Center
P.O. Box 33172
Detroit, MI 48232-5172

In Canada, call 1-800-263-3777 (English) or 1-800-263-7854 (French), or write:

General Motors of Canada Company
Customer Care Centre, Mail Code: CA1-163-005
1908 Colonel Sam Drive
Oshawa, Ontario L1H 8P7

In Mexico, call 01-800-466-0801.

In other Central America and Caribbean Countries, call 52-722-236-0680.

Vehicle Data Recording and Privacy

The vehicle has a number of computers that record information about the vehicle's performance and how it is driven. For example, the vehicle uses computer modules to monitor and control engine and transmission performance, to monitor the conditions for airbag deployment and deploy them in a crash, and, if equipped, to provide antilock braking to help the driver control the vehicle. These modules may store data to help the dealer technician service the vehicle. Some modules may also store data about how the vehicle is operated, such as rate of fuel consumption or average speed. These modules may retain personal preferences, such as radio presets, seat positions, and temperature settings.

Event Data Recorders

This vehicle is equipped with an event data recorder (EDR). The main purpose of an EDR is to record, in certain crash or near crash-like situations, such as an air bag deployment or hitting a road obstacle, data that will assist in understanding how a vehicle's systems performed. The EDR is designed to record data related to vehicle dynamics and safety systems for a short period of time, typically 30 seconds or less. The EDR in this vehicle is designed to record such data as:

- How various systems in your vehicle were operating;
- Whether or not the driver and passenger safety belts were buckled/fastened;
- How far (if at all) the driver was depressing the accelerator and/or brake pedal; and,
- How fast the vehicle was traveling.

These data can help provide a better understanding of the circumstances in which crashes and injuries occur.

Note

EDR data are recorded by your vehicle only if a non-trivial crash situation occurs; no data are recorded by the EDR under normal driving conditions and no personal data (e.g., name, gender, age, and crash location) are recorded. However, other parties, such as law enforcement, could combine the EDR data with the type of personally identifying data routinely acquired during a crash investigation.

To read data recorded by an EDR, special equipment is required, and access to the vehicle or the EDR is needed. In addition to the vehicle manufacturer, other parties, such as law enforcement, that have the special equipment, can read the information if they have access to the vehicle or the EDR.

GM will not access these data or share it with others except: with the consent of the vehicle owner or, if the vehicle is leased, with the consent of the lessee; in response to an official request by police or similar government office; as part of GM's defense of litigation through the discovery process; or, as required by law. Data that GM collects or receives may also be used for GM research needs or may be made available to others for research purposes, where a need is shown and the data is not tied to a specific vehicle or vehicle owner.

OnStar

If the vehicle is equipped with OnStar and has an active service plan, additional data may be collected through the OnStar system. This includes information about the vehicle's operation; collisions involving the vehicle; the use of the vehicle and its features; and, in certain situations, the location and approximate GPS speed of the vehicle. Refer to the OnStar Terms and Conditions and Privacy Statement on the OnStar website.

See *OnStar Additional Information* ⇨ *389*.

Infotainment System

If the vehicle is equipped with a navigation system as part of the infotainment system, use of the system may result in the storage of destinations, addresses, telephone numbers, and other trip information. See the infotainment manual for information on stored data and for deletion instructions.

OnStar

OnStar Overview
OnStar Overview 383

OnStar Services
Emergency 384
Security 385
Navigation 385
Connections 386
Diagnostics 388

OnStar Additional Information
OnStar Additional Information 389

OnStar Overview

Voice Command Button

Blue OnStar Button

Red Emergency Button

This vehicle may be equipped with a comprehensive, in-vehicle system that can connect to an OnStar Advisor for Emergency, Security, Navigation, Connections, and Diagnostics Services. OnStar services may require a paid service plan and data plan. OnStar requires the vehicle battery and electrical system, cellular service, and GPS satellite signals to be available and operating. OnStar acts as a link to existing emergency service providers. OnStar may collect information about you and your vehicle, including location information. See OnStar User Terms, Privacy Statement, and Software Terms for more details including system limitations at www.onstar.com (U.S.) or www.onstar.ca (Canada).

The OnStar system status light is next to the OnStar buttons. If the status light is:

- Solid Green: System is ready.
- Flashing Green: On a call.
- Red: Indicates a problem.
- Off: System is active. Press twice to speak with an OnStar Advisor.

Press or call 1-888-4ONSTAR (1-888-466-7827) to speak to an Advisor.

Functionality of the Voice Command button may vary by vehicle and region.

Press to:

- Open the OnStar app on the infotainment display. See the infotainment manual for information on how to use the OnStar app.

Or

- Make a call, end a call, or answer an incoming call.
- Give OnStar Hands-Free Calling voice commands.
- Give OnStar Turn-by-Turn Navigation voice commands.
- Obtain and customize the Wi-Fi hotspot name or SSID and password, if equipped.

Press to connect to an Advisor to:

- Verify account information or update contact information.
- Get driving directions.
- Receive a Diagnostic check of the vehicle's key operating systems.
- Receive Roadside Assistance.
- Manage Wi-Fi Settings, if equipped.

Press to get a priority connection to an OnStar Advisor available 24/7 to:

- Get help for an emergency.
- Be a Good Samaritan or respond to an AMBER Alert.
- Get assistance in severe weather or other crisis situations and find evacuation routes.

OnStar Services

Emergency

Emergency Services require an active, OnStar service plan (excludes Basic Plan). With Automatic Crash Response, built-in sensors can automatically alert a specially trained OnStar Advisor who is immediately connected in to the vehicle to help.

Press for a priority connection to an OnStar Advisor who can contact emergency service providers, direct them to your exact location, and relay important information.

With OnStar Crisis Assist, specially trained Advisors are available 24 hours a day, 7 days a week, to provide a central point of contact, assistance, and information during a crisis.

With Roadside Assistance, Advisors can locate a nearby service provider to help with a flat tire, a battery jump, or an empty gas tank.

Security

If equipped, OnStar provides these services:

- With Stolen Vehicle Assistance, OnStar Advisors can use GPS to pinpoint the vehicle and help authorities quickly recover it.
- With Remote Ignition Block, if equipped, OnStar can block the engine from being restarted.
- With Stolen Vehicle Slowdown, if equipped, OnStar can work with law enforcement to gradually slow the vehicle down.

Theft Alarm Notification

If equipped, if the doors are locked and the vehicle alarm sounds, a notification by text, e-mail, or phone call will be sent. If the vehicle is stolen, an OnStar Advisor can work with authorities to recover the vehicle.

Navigation

OnStar navigation requires a specific OnStar service plan.

Press to receive Turn-by-Turn directions or have them sent to the vehicle's navigation screen, if equipped.

Turn-by-Turn Navigation

1. Press to connect to an Advisor.
2. Request directions to be downloaded to the vehicle.
3. Follow the voice-guided commands.

Using Voice Commands During a Planned Route

Functionality of the Voice Command button may vary by vehicle and region. For some vehicles, press to open the OnStar app on the infotainment display. For other vehicles press as follows.

Cancel Route

1. Press . System responds: "OnStar ready," then a tone.
2. Say "Cancel route." System responds: "Do you want to cancel directions?"
3. Say "Yes." System responds: "OK, request completed, thank you, goodbye."

Route Preview

1. Press . System responds: "OnStar ready," then a tone.
2. Say "Route preview." System responds with the next three maneuvers.

Repeat

1. Press . System responds: "OnStar ready," then a tone.
2. Say "Repeat." System responds with the last direction given, then responds with "OnStar ready," then a tone.

Get My Destination

1. Press . System responds: “OnStar ready,” then a tone.
2. Say “Get my destination.” System responds with the address and distance to the destination, then responds with “OnStar ready,” then a tone.

Send Destination to Vehicle

Directions can be sent to the vehicle’s navigation screen, if equipped.

Press , then ask the Advisor to download directions to the vehicle’s navigation system, if equipped. After the call ends, the navigation screen will provide prompts to begin driving directions. Routes that are sent to the navigation screen can only be canceled through the navigation system.

See www.onstar.com (U.S.) or www.onstar.ca (Canada).

Connections

The following OnStar services help with staying connected.

For coverage maps, see www.onstar.com (U.S.) or www.onstar.ca (Canada).

Ensuring Security

- Change the default passwords for the Wi-Fi hotspot and myGMC mobile application. Make these passwords different from each other and use a combination of letters, numbers, and symbols to increase the security.
- Change the default name of the SSID (Service Set Identifier). This is your network’s name that is visible to other wireless devices. Choose a unique name and avoid family names or vehicle descriptions.

OnStar Wi-Fi Hotspot (If Equipped)

The vehicle may have a built-in Wi-Fi hotspot that provides access to the Internet and web content at 4G LTE speed. Up to seven mobile devices can be connected. A data plan is required. Use the in-vehicle controls only when it is safe to do so.

1. To retrieve Wi-Fi hotspot information, press to open the OnStar app on the infotainment display, then select Wi-Fi Hotspot. On some vehicles, touch Wi-Fi or Wi-Fi Settings on the screen.
2. The Wi-Fi settings will display the Wi-Fi hotspot name (SSID), password, and on some vehicles, the connection type (no Internet connection, 3G, 4G, 4G LTE), and signal quality (poor, good, excellent).
3. To change the SSID or password, press or call 1-888-4ONSTAR to connect with an Advisor. On some vehicles, the SSID and password can be changed in the Wi-Fi Hotspot menu.

After initial set-up, your vehicle's Wi-Fi hotspot will connect automatically to your mobile devices. Manage data usage by turning Wi-Fi on or off on your mobile device, using the myGMC mobile app, or by contacting an OnStar Advisor. On some vehicles, Wi-Fi can also be managed from the Wi-Fi Hotspot menu.

MyGMC Mobile App (If Available)

Download the myGMC mobile app to compatible Apple and Android smartphones. GMC users can access the following services from a smartphone:

- Remotely start/stop the vehicle, if factory-equipped.
- Lock/unlock doors, if equipped with automatic locks.
- Activate the horn and lamps.
- Check the vehicle's fuel level, oil life, or tire pressure, if factory-equipped with the Tire Pressure Monitor System.
- Send destinations to the vehicle.
- Locate the vehicle on a map (U.S. market only).
- Turn the vehicle's Wi-Fi hotspot on/off, manage settings, and monitor data consumption, if equipped.
- Locate a dealer and schedule service.
- Request roadside assistance.
- Set a parking reminder with pin drop, take a photo, make a note, and set a timer.
- Connect with GMC on social media.

For myGMC mobile app information and compatibility, see my.gmc.com.

An active OnStar service, compatible device, factory-installed remote start, and power locks are required. Data rates apply. See onstar.com for details and system limitations.

Remote Services

Contact an OnStar Advisor to unlock the doors or sound the horn and flash the lamps.

OnStar AtYourService

OnStar Advisors can provide offers from restaurants and retailers on your route, help locate hotels, or book a room. These services vary by market.

OnStar Hands-Free Calling

Make and receive calls with the built-in wireless calling service, which requires available minutes. Functionality of the Voice Command button may vary by vehicle and region. For some vehicles, press to open the OnStar app on the infotainment display, then select Hands-Free calling. For other vehicles press as follows.

Make a Call

1. Press . System responds: "OnStar ready."
2. Say "Call." System responds: "Call. Please say the name or number to call."

3. Say the entire number without pausing, including a “1” and the area code. System responds: “OK, calling.”

Calling 911 Emergency

1. Press . System responds: “OnStar ready.”
2. Say “Call.” System responds: “Call. Please say the name or number to call.”
3. Say “911” without pausing. System responds: “911.”
4. Say “Call.” System responds: “OK, dialing 911.”

Retrieve My Number

1. Press . System responds: “OnStar ready.”
2. Say “My number.” System responds: “Your OnStar Hands-Free Calling number is,” then says the number.

End a Call

Press . System responds: “Call ended.”

Verify Minutes and Expiration

Press and say “Minutes” then “Verify” to check how many minutes remain and their expiration date.

Diagnostics

By monitoring and reporting on the vehicle’s key systems, OnStar Advanced Diagnostics provides a way to keep up on maintenance. Capabilities vary by model. See www.onstar.com for details and system limitations. Message and data rates may apply. Advanced Diagnostics requires an active OnStar paid service plan, e-mail address on file, and enrollment in Advanced Diagnostics.

Includes:

- Diagnostic Alerts: Set preferences to receive real-time e-mails, texts, or monthly reports of the vehicle’s health. Or press to have an Advisor initiate a remote diagnostic report.
- Proactive Alerts: Receive a real-time e-mail or text message regarding potential issues with key vehicle components, such as the battery, fuel system, or starter system. Alerts for potential issues appear on the infotainment display. Proactive Alerts are designed to help predict specific types of issues based on information collected from the vehicle. Other factors may affect vehicle performance. Not all issues will deliver alerts. In some cases, a dealer service check may be required to confirm the accuracy of the alerts.
- Dealer Maintenance Notification: Have the vehicle notify your preferred dealer when it is time for maintenance. Your dealer will then contact you to set up an appointment.

To begin, press to speak to an Advisor, or see www.onstar.com.

OnStar Additional Information

OnStar Smart Driver

OnStar Smart Driver provides information about driving behavior to help maximize overall vehicle performance, reduce wear and tear, and enhance fuel efficiency. An Insurance Discounts Eligibility feature is also offered within OnStar Smart Driver. See www.onstar.com for details regarding vehicle eligibility and system limitations.

OnStar, General Motors, and their affiliates are not insurance providers. Obtain insurance only from licensed insurance providers.

In-Vehicle Audio Messages

Audio messages may play important information at the following times:

- Prior to vehicle purchase. Press to set up an account.
- With the OnStar Basic Plan, every 60 days.
- After change in ownership and at 90 days.

Transferring Service

Press to request account transfer eligibility information. The Advisor can cancel or change account information.

Selling/Transferring the Vehicle

Call 1-888-4ONSTAR (1-888-466-7827) immediately to terminate your OnStar services if the vehicle is disposed of, sold, transferred, or if the lease ends.

Reactivation for Subsequent Owners

Press and follow the prompts to speak to an Advisor as soon as possible. The Advisor will update vehicle records and explain OnStar service options.

How OnStar Service Works

Automatic Crash Response, Emergency Services, Crisis Assist, Stolen Vehicle Assistance, Advanced Vehicle Diagnostics, Remote Services, Roadside Assistance, Turn-by-Turn Navigation, and Hands-Free Calling are available on most vehicles. Not all OnStar services are available everywhere or on all vehicles. For more information, a full description of OnStar services, system limitations, and OnStar User Terms, Privacy Statement, and Software Terms:

- Call 1-888-4ONSTAR (1-888-466-7827).
- See www.onstar.com (U.S.).
- See www.onstar.ca (Canada).
- Call TTY 1-877-248-2080.
- Press to speak with an Advisor.

OnStar services cannot work unless the vehicle is in a place where OnStar has an agreement with a wireless service provider for service in that area. The wireless service provider must also have coverage, network capacity, reception, and technology compatible with OnStar

services. Service involving location information about the vehicle cannot work unless GPS signals are available, unobstructed, and compatible with the OnStar hardware. OnStar services may not work if the OnStar equipment is not properly installed or it has not been properly maintained. If equipment or software is added, connected, or modified, OnStar services may not work. Other problems beyond the control of OnStar — such as hills, tall buildings, tunnels, weather, electrical system design and architecture of the vehicle, damage to the vehicle in a crash, or wireless phone network congestion or jamming — may prevent service.

See *Radio Frequency Statement* ⇨ *379*.

Services for People with Disabilities

Advisors provide services to help with physical disabilities and medical conditions.

Press OnStar to help:

- Locate a gas station with an attendant to pump gas.
- Find a hotel, restaurant, etc., that meets accessibility needs.
- Provide directions to the closest hospital or pharmacy in urgent situations.

TTY Users

OnStar has the ability to communicate to deaf, hard-of-hearing, or speech-impaired customers while in the vehicle. The available dealer-installed TTY system can provide in-vehicle access to all OnStar services, except Virtual Advisor and OnStar Turn-by-Turn Navigation.

OnStar Personal Identification Number (PIN)

A PIN is needed to access some OnStar services. The PIN will need to be changed the first time when speaking with an Advisor. To change the OnStar PIN, contact an OnStar Advisor by pressing OnStar or calling 1-888-4ONSTAR.

Warranty

OnStar equipment may be warranted as part of the vehicle warranty.

Languages

The vehicle can be programmed to respond in multiple languages. Press OnStar and ask for an Advisor. Advisors are available in English, Spanish, and French. Available languages may vary by country.

Potential Issues

OnStar cannot perform Remote Door Unlock or Stolen Vehicle Assistance after the vehicle has been off continuously for 10 days without an ignition cycle. If the vehicle has not been started for 10 days, OnStar can contact Roadside Assistance or a locksmith to help gain access to the vehicle.

Global Positioning System (GPS)

- Obstruction of the GPS can occur in a large city with tall buildings; in parking garages; around airports; in tunnels and underpasses; or in an area with very dense trees. If GPS signals are not available, the OnStar system should still operate to call OnStar. However, OnStar could have difficulty identifying the exact location.
- In emergency situations, OnStar can use the last stored GPS location to send to emergency responders.

A temporary loss of GPS can cause loss of the ability to send a Turn-by-Turn Navigation route. The Advisor may give a verbal route or may ask for a call back after the vehicle is driven into an open area.

Cellular and GPS Antennas

Cellular reception is required for OnStar to send remote signals to the vehicle. Do not place items over or near the antenna to prevent blocking cellular and GPS signal reception.

Unable to Connect to OnStar Message

If there is limited cellular coverage or the cellular network has reached maximum capacity, this message may come on. Press On to try the call again or try again after driving a few miles into another cellular area.

Vehicle and Power Issues

OnStar services require a vehicle electrical system, wireless service, and GPS satellite technologies to be available and operating for features to function properly. These systems may not operate if the battery is discharged or disconnected.

Add-on Electrical Equipment

The OnStar system is integrated into the electrical architecture of the vehicle. Do not add any electrical equipment. Added electrical equipment may interfere with the operation of the OnStar system and cause it to not operate.

Vehicle Software Updates

OnStar or GM may remotely deliver software updates or changes to the vehicle without further notice or consent. These updates or changes may enhance or maintain safety, security, or the operation of the vehicle or the vehicle systems. Software updates or changes may affect or erase data or settings that are stored in the vehicle, such as OnStar Hands-Free Calling name tags, saved navigation destinations, or pre-set radio stations. Neither OnStar nor GM is responsible for any affected or erased data or settings. These updates or changes may also collect personal information. Such collection is described in the OnStar privacy statement or separately disclosed at the time of installation. These updates or changes may also cause a system to automatically communicate with GM servers to collect information about vehicle

system status, identify whether updates or changes are available, or deliver updates or changes. An active OnStar agreement constitutes consent to these software updates or changes and agreement that either OnStar or GM may remotely deliver them to the vehicle.

Privacy

The complete OnStar Privacy Statement may be found at www.onstar.com (U.S.), or www.onstar.ca (Canada). We recommend that you review it. If you have any questions, call 1-888-4ONSTAR (1-888-466-7827) or press to speak with an Advisor. Users of wireless communications are cautioned that the privacy of any information sent via wireless cellular communications cannot be assured. Third parties may unlawfully intercept or access transmissions and private communications without consent.

OnStar - Software Acknowledgements

Certain OnStar components include libcurl and unzip software and other third party software. Below are the notices and licenses associated with libcurl and unzip and for other third party software please see http://opensource.lge.com/index

www.onstar.com/us/en/

libcurl:

COPYRIGHT AND PERMISSION NOTICE

Copyright (c) 1996 - 2010, Daniel Stenberg, <daniel@haxx.se>.

All rights reserved.

Permission to use, copy, modify, and distribute this software for any purpose with or without fee is hereby granted, provided that the above copyright notice and this permission notice appear in all copies.

THE SOFTWARE IS PROVIDED “AS IS,” WITHOUT WARRANTY OF ANY KIND, EXPRESS OR IMPLIED, INCLUDING BUT NOT LIMITED TO THE WARRANTIES OF MERCHANTABILITY, FITNESS FOR A PARTICULAR PURPOSE AND NONINFRINGEMENT OF THIRD PARTY RIGHTS. IN NO EVENT SHALL THE AUTHORS OR COPYRIGHT HOLDERS BE LIABLE FOR ANY CLAIM, DAMAGES OR OTHER LIABILITY, WHETHER IN AN ACTION OF CONTRACT, TORT OR OTHERWISE, ARISING FROM, OUT OF OR IN CONNECTION WITH THE SOFTWARE OR THE USE OR OTHER DEALINGS IN THE SOFTWARE.

Except as contained in this notice, the name of a copyright holder shall not be used in advertising or otherwise to promote the sale, use or other dealings in this Software without prior written authorization of the copyright holder.

unzip:

This is version 2005-Feb-10 of the Info-ZIP copyright and license. The definitive version of this document

should be available at ftp://ftp.info-zip.org/pub/infozip/license.html indefinitely.

Copyright (c) 1990-2005 Info-ZIP. All rights reserved.

For the purposes of this copyright and license, “Info-ZIP” is defined as the following set of individuals:

Mark Adler, John Bush, Karl Davis, Harald Denker, Jean-Michel Dubois, Jean-loup Gailly, Hunter Goatley, Ed Gordon, Ian Gorman, Chris Herborth, Dirk Haase, Greg Hartwig, Robert Heath, Jonathan Hudson, Paul Kienitz, David Kirschbaum, Johnny Lee, Onno van der Linden, Igor Mandrichenko, Steve P. Miller, Sergio Monesi, Keith Owens, George Petrov, Greg Roelofs, Kai Uwe Rommel, Steve Salisbury, Dave Smith, Steven M. Schweda, Christian Spieler, Cosmin Truta, Antoine Verheijen, Paul von Behren, Rich Wales, Mike White.

This software is provided “as is,” without warranty of any kind, express or implied. In no event shall Info-ZIP or its contributors be held liable for any direct, indirect, incidental, special or consequential damages arising out of the use of or inability to use this software.

Permission is granted to anyone to use this software for any purpose, including commercial applications, and to alter it and redistribute it freely, subject to the following restrictions:

1. Redistributions of source code must retain the above copyright notice, definition, disclaimer, and this list of conditions.
2. Redistributions in binary form (compiled executables) must reproduce the above copyright notice, definition, disclaimer, and this list of conditions in documentation and/or other materials provided with the distribution. The sole exception to this condition is redistribution of a standard UnZipSFX binary (including SFXWiz) as part of a self-extracting archive; that is permitted without inclusion of this license, as long as the normal SFX banner has not been removed from the binary or disabled.
3. Altered versions–including, but not limited to, ports to new operating systems, existing ports with new graphical interfaces, and dynamic, shared, or static library versions–must be plainly marked as such and must not be misrepresented as being the original source. Such altered versions also must not be misrepresented as being Info-ZIP releases–including, but not limited to, labeling of the altered versions with the names “Info-ZIP” (or any variation thereof, including, but not limited to, different capitalizations), “Pocket UnZip,” “WiZ” or “MacZip” without the explicit permission of Info-ZIP. Such altered versions are further prohibited from misrepresentative use of the Zip-Bugs or Info-ZIP e-mail addresses or of the Info-ZIP URL(s).

4. Info-ZIP retains the right to use the names “Info-ZIP,” “Zip,” “UnZip,” “UnZipSFX,” “WiZ,” “Pocket UnZip,” “Pocket Zip,” and “MacZip” for its own source and binary releases.

Index

A

About Driving the Vehicle 2
Accessories and
  Modifications 261
Accessory Power 192
Add-On Electrical Equipment ...257
Additional Information
  OnStar 389
Additional Maintenance
  and Care 358
Adjustments
  Lumbar, Front Seats 59
Air Cleaner/Filter, Engine 274
Air Conditioning 160, 162
Air Filter, Passenger
  Compartment 165
Air Vents 165
Airbag System
  Check 87
  How Does an Airbag
    Restrain? 80
  Passenger Sensing System 82
  What Makes an Airbag
    Inflate? 80
  What Will You See after an
    Airbag Inflates? 81
  When Should an Airbag
    Inflate? 79
Airbag System (cont'd)
  Where Are the Airbags? 78
Airbags
  Adding Equipment to the
    Vehicle 86
  Passenger Status Indicator ... 126
  Readiness Light 126
  Servicing Airbag-Equipped
    Vehicles 86
  System Check 76
Alarm
  Vehicle Security 46
Alert
  Lane Change 232
  Side Blind Zone (SBZA) 232
All-Season Tires 301
All-Wheel Drive 209, 285
Antilock Brake System (ABS) ...210
  Warning Light 131
Appearance Care
  Exterior 341
  Interior 346
Assistance Program,
  Roadside 373
Assistance Systems for
  Driving 228
Assistance Systems for
  Parking and Backing 223

Automatic
Dimming Mirrors 50
Door Locks 39
Forward Braking 231
Headlamp System 154
Transmission 204
Transmission Fluid 274
Automatic Transmission
Manual Mode 208

B

Battery
Exterior Lighting Battery Saver 158
Load Management 158
Power Protection 158
Battery - North America 284, 335
Biodiesel 241
Blade Replacement, Wiper 286
Brake
Parking, Electric 210
System Warning Light 129
Brakes 282
Antilock 210
Assist 212
Fluid 283
Braking 171
Automatic Forward 231
Break-In, New Vehicle 185
Bulb Replacement
Front Turn Signal Lamps 289
Halogen Bulbs 289
Headlamp Aiming 289
Headlamps 289
High Intensity Discharge (HID) Lighting 289
License Plate Lamps 291
Taillamps 290
Buying New Tires 315

C

Calibration 113
California
Fuel Requirements 237
Perchlorate Materials Requirements 261
California Proposition 65 Warning . . . . . 260, 284, 335, Back Cover
Canadian Vehicle Owners 2
Capacities and Specifications 366
Carbon Monoxide
Engine Exhaust 196
Liftgate 41
Carbon Monoxide (cont'd)
Winter Driving 179
Cargo
Cover 107
Tie-Downs 108
Caution, Danger, and Warning 3
Center Console Storage 106
Chains, Tire 320
Charging
Wireless 115
Charging System Light 127
Check
Engine Light (Malfunction Indicator) 127
Child Restraints
Infants and Young Children 90
Lower Anchors and Tethers for Children 95
Older Children 88
Securing 101, 103
Systems 92
Circuit Breakers 292
Cleaning
Exterior Care 341
Interior Care 346
Climate Control Systems 160
Air Conditioning 160
Dual Automatic 162

Climate Control Systems (cont'd)
Heating 160
Clock 114
Cluster, Instrument 119
Cold Weather Operation 242
Collision Damage Repair 376
Compact Spare Tire 334
Compartments
Storage 106
Compass 113
Compressor Kit, Tire Sealant . . . 322
Connections
OnStar 386
Control
Hill Descent 216
Traction and Electronic
Stability 213
Control Light
Hill Descent 131
Control of a Vehicle 171
Convenience Net 108
Convex Mirrors 49
Coolant
Engine Temperature Gauge . . 124
Cooling 160, 162
Cooling System 276
Courtesy Lamps 156
Courtesy Transportation
Program 375
Cover
Cargo 107
Cruise Control 220
Light 136
Cupholders 106
Customer Assistance 372
Offices 371
Text Telephone (TTY)
Users 372
Customer Information
Service Publications
Ordering Information 378
Customer Satisfaction
Procedure 369

D

Damage Repair, Collision 376
Danger, Warning, and Caution 3
Data Collection
Infotainment System 382
OnStar 382
Data Recorders, Event 381
Daytime Running
Lamps (DRL) 153
Defensive Driving 171
Delayed Locking 39
Diagnostics
OnStar 388
Diesel Exhaust Fluid 27, 198
Diesel Exhaust Fluid (DEF)
Warning Light 134
Diesel Particulate Filter 197
Distracted Driving 170
Dome Lamps 156
Door
Delayed Locking 39
Locks 37
Power Locks 39
Drive Belt Routing, Engine 368
Drive Systems
All-Wheel Drive 209, 285
Driver Assistance Systems 222
Driver Behavior 169
Driver Information
Center (DIC) 136
Driver Mode Control 216
Driving
Assistance Systems 228
Characteristics and
Towing Tips 251
Defensive 171
Drunk 171
Environment 170
For Better Fuel Economy 26

Driving (cont'd)
Hill and Mountain Roads 179
If the Vehicle is Stuck 180
Loss of Control 173
Off-Road 174
Off-Road Recovery 173
Vehicle Load Limits 181
Wet Roads 178
Winter 179
Driving the Vehicle 2
Dual Automatic Climate
Control System 162

E

Electric Parking Brake 210
Electric Parking Brake Light 130
Electrical Equipment,
Add-On 257
Electrical System
Engine Compartment Fuse
Block 293
Fuses and Circuit Breakers ... 292
Instrument Panel Fuse
Block 296
Overload 292
Rear Compartment Fuse
Block 298
Emergency
OnStar 384
Engine
Air Cleaner/Filter 274
Check Light (Malfunction
Indicator) 127
Compartment Overview 264
Coolant Temperature
Gauge 124
Cooling System 276
Drive Belt Routing 368
Exhaust 196
Heater 191
Oil Life System 273
Oil Pressure Light 133
Overheating 280
Power Messages 142
Running While Parked 197
Starting 188
Engines
Diesel Fuel 238
Entry Lighting 157
Equipment, Towing 256
Event Data Recorders 381
Exhaust Fluid
Diesel 198
Exit Lighting 157
Extended Parking 196
Extender, Seat Belt 74
Exterior Lamp Controls 151
Exterior Lighting Battery
Saver 158

F

Features
Memory 13
Filter 197
Replacement (Fuel) 246
Filter,
Engine Air Cleaner 274
Flash-to-Pass 153
Flashers, Hazard Warning 154
Flat Tire 320
Changing 329
Floor Mats 349
Fluid
Automatic Transmission 274
Brakes 283
Diesel Exhaust 27
Washer 282
Fog Lamps 155
Folding Mirrors 49
Folding Seatback 64
Forward Automatic Braking 231
Forward Collision Alert
(FCA) System 228

Frequency Statement
Radio 379
Front Fog Lamp
Light 135
Front Seats
Adjustment 58
Heated and Ventilated 63
Front Turn Signal Lamps 289
Fuel 236
Additives 238
Biodiesel 241
Cold Weather Operation 242
Diesel Engines 238
Economy Driving 26
Filling a Portable Fuel
Container 250
Filling the Tank 247, 248
Filter Replacement 246
Foreign Countries 238
Gauge 123
Low Fuel Warning Light 134
Requirements, California 237
Running out of Fuel 246
Water in Fuel 243
What to Use in Canada and
Mexico 240
What to Use in the U.S. 239
Fuel for Diesel Engines 238
Fuses
Engine Compartment Fuse
Block 293
Fuses and Circuit Breakers . . . 292
Instrument Panel Fuse
Block 296
Rear Compartment Fuse
Block 298

G

Garage Door Opener 147
Programming 147
Gas Strut(s) 287
Gauges
Engine Coolant
Temperature 124
Fuel 123
Odometer 123
Speedometer 123
Tachometer 123
Trip Odometer 123
Warning Lights and
Indicators 118
General Information
Service and Maintenance 351
Towing 251
Vehicle Care 260
Glove Box 106
GM Mobility Reimbursement
Program 373

H

Halogen Bulbs 289
Hazard Warning Flashers 154
Head Restraints 56
Headlamps
Aiming 289
Automatic 154
Bulb Replacement 289
Daytime Running
Lamps (DRL) 153
Flash-to-Pass 153
High Intensity Discharge
(HID) Lighting 289
High-Beam On Light 135
High/Low Beam Changer 153
Lamps On Reminder 135
Heated
Rear Seats 68
Steering Wheel 111
Heated and Ventilated Front
Seats 63
Heated Mirrors 49
Heater
Engine 191
Heating 160, 162

High-Beam On Light 135
Hill and Mountain Roads 179
Hill Descent Control (HDC) 216
Hill Descent Control Light 131
Hill Start Assist (HSA) 212
Hood 262
Horn 111
How to Wear Seat Belts
Properly 70
HVAC 160, 162

I

Ignition Positions 186
Immobilizer 47
Indicator
Vehicle Ahead 132
Infants and Young Children,
Restraints 90
Infotainment 159
Infotainment System 382
Instrument Cluster 119
Interior Rearview Mirrors 50
Introduction 2

J

Jump Starting - North
America 335

K

Keyless Entry
Remote (RKE) System 29
Keys 28

L

Labeling, Tire Sidewall 302
Lamps
Courtesy 156
Daytime Running (DRL) 153
Dome 156
Exterior Controls 151
Exterior Lighting Battery
Saver 158
Front Turn Signal 289
License Plate 291
Malfunction Indicator
(Check Engine) 127
On Reminder 135
Reading 156
Taillamps 290
Lane Change Alert (LCA) 232
Lane Departure
Warning (LDW) 234
Lane Keep Assist (LKA) 234
Lane Keep Assist Light 131
Lap-Shoulder Belt 71
LATCH System
Replacing Parts after a
Crash 100
LATCH, Lower Anchors and
Tethers for Children 95
LED Lighting 289
Liftgate 41
Lighting
Entry 157
Exit 157
Illumination Control 156
LED 289
Lights
Airbag Readiness 126
Antilock Brake System
(ABS) Warning 131
Brake System Warning 129
Charging System 127
Check Engine (Malfunction
Indicator) 127
Cruise Control 136
Diesel Exhaust Fluid (DEF) . . . 134
Electric Parking Brake 130
Engine Oil Pressure 133
Flash-to-Pass 153
Front Fog Lamp 135
High-Beam On 135
High/Low Beam Changer 153

Lights (cont'd)
Hill Descent Control 131
Lane Keep Assist 131
Low Fuel Warning 134
Seat Belt Reminders 125
Security 135
Service Electric Parking Brake 130
StabiliTrak OFF 132
Tire Pressure 133
Tow/Haul Mode 131
Traction Control System (TCS)/StabiliTrak 132
Traction Off 132
Wait to Start 133
Locks
Automatic Door 39
Delayed Locking 39
Door 37
Lockout Protection 40
Power Door 39
Safety 40
Loss of Control 173
Low Fuel Warning Light 134
Lower Anchors and Tethers for Children (LATCH System) 95
Lumbar Adjustment 59
Front Seats 59

M

Maintenance
Records 364
Maintenance and Care
Additional 358
Maintenance Schedule 353
Recommended Fluids and Lubricants 361
Malfunction Indicator Lamp 127
Manual Mode 208
Memory Features 13
Memory Seats 60
Messages
Engine Power 142
Vehicle 141
Vehicle Speed 142
Mirrors
Automatic Dimming 50
Automatic Dimming Rearview 50
Convex 49
Folding 49
Heated 49
Manual Rearview 50
Power 49
Mirrors (cont'd)
Tilt in Reverse 50
Mirrors, Interior Rearview 50
Mode 216
Driver Control 216
Monitor System, Tire Pressure 309

N

Navigation
OnStar 385
Net, Convenience 108
New Vehicle Break-In 185

O

Odometer 123
Trip 123
Off-Road 174
Driving 174
Recovery 173
Oil
Engine 269
Engine Oil Life System 273
Pressure Light 133
Older Children, Restraints 88
Online Owner Center 372
OnStar 382
OnStar Additional Information 389

OnStar Connections 386
OnStar Diagnostics 388
OnStar Emergency 384
OnStar Navigation 385
OnStar Overview 383
OnStar Security 385
Operation
  Fog Lamps 155
Ordering
  Service Publications 378
Outlets
  Power 114
Overheating, Engine 280

P

Park
  Shifting Into 192
  Shifting Out of 193
Parking
  Brake and P (Park)
    Mechanism Check 286
  Extended 196
  Over Things That Burn 196
Parking Assist 223
Parking or Backing
  Assistance Systems 223
Passenger Airbag Status
  Indicator 126
Passenger Compartment Air
  Filter 165
Passenger Sensing System 82
Perchlorate Materials
  Requirements, California 261
Personalization
  Vehicle 142
Power
  Door Locks 39
  Mirrors 49
  Outlets 114
  Protection, Battery 158
  Retained Accessory (RAP) . . . 192
  Seat Adjustment 58
  Windows 51
Pregnancy, Using Seat Belts 74
Privacy
  Vehicle Data Recording 381
Program
  Courtesy Transportation 375
Proposition
  65 Warning,
  California 260, 284, 335,
    Back Cover

R

Radio Frequency Statement 379
Reading Lamps 156
Rear Seats 65
  Heated 68
Rear Vision Camera (RVC) 223
Rear Window Washer/Wiper 112
Rearview Mirrors 50
  Automatic Dimming 50
Reclining Seatbacks 59
Recommended Fluids and
  Lubricants 361
Records
  Maintenance 364
Recreational Vehicle Towing 339
Reimbursement Program,
  GM Mobility 373
Remote Keyless Entry (RKE)
  System 29
Remote Vehicle Start 35
Replacement Parts
  Airbags 87
  Maintenance 362
Replacing Airbag System 87
Replacing LATCH System
  Parts after a Crash 100
Replacing Seat Belt System
  Parts after a Crash 75

Reporting Safety Defects
Canadian Government 380
General Motors 380
U.S. Government 379
Restraints
Where to Put 94
Retained Accessory
Power (RAP) 192
Reverse Tilt Mirrors 50
Roads
Driving, Wet 178
Roadside Assistance
Program 373
Roof
Sunroof 53
Roof Rack System 108
Rotation, Tires 314
Routing, Engine Drive Belt 368
Running out of Fuel 246
Running the Vehicle While
Parked 197

S

Safety Defects Reporting
Canadian Government 380
General Motors 380
Safety Defects Reporting (cont'd)
U.S. Government 379
Safety Locks 40
Safety System Check 75
Scheduling Appointments 375
Sealant Kit, Tire 322
Seat Belts 69
Care 75
Extender 74
How to Wear Seat Belts
Properly 70
Lap-Shoulder Belt 71
Reminders 125
Replacing after a Crash 75
Use During Pregnancy 74
Seats
Adjustment, Front 58
Folding Seatback 64
Head Restraints 56
Heated and Ventilated Front 63
Heated, Rear 68
Lumbar Adjustment, Front 59
Memory 60
Power Adjustment, Front 58
Rear 65
Reclining Seatbacks 59
Securing Child
Restraints 101, 103
Security
Light 135
OnStar 385
Vehicle 46
Vehicle Alarm 46
Service 167
Accessories and
Modifications 261
Climate Control System 160
Doing Your Own Work 261
Maintenance Records 364
Maintenance, General
Information 351
Parts Identification Label 365
Publications Ordering
Information 378
Scheduling Appointments 375
Service Electric Parking
Brake Light 130
Services
Special Application 358
Servicing the Airbag 86
Shifting
Into Park 192
Out of Park 193

Side Blind Zone Alert (SBZA) . . . 232
Signals, Turn and
Lane-Change 155
Spare Tire
Compact 334
Special Application Services 358
Specifications and
Capacities 366
Speedometer 123
StabiliTrak
OFF Light 132
Start Assist, Hill 212
Start Vehicle, Remote 35
Starter Switch Check 285
Starting the Engine 188
Steering 172
Heated Wheel 111
Wheel Adjustment 111
Wheel Controls 111
Storage Areas
Cargo Cover 107
Center Console 106
Convenience Net 108
Glove Box 106
Roof Rack System 108
Storage Compartments 106
Storing the Tire Sealant and
Compressor Kit 328
Struts
Gas 287
Stuck Vehicle 180
Summer Tires 302
Sun Visors 52
Sunroof 53
Symbols 3
System
Forward Collision
Alert (FCA) 228
Infotainment 159, 382
Roof Rack 108
Systems
Driver Assistance 222

T

Tachometer 123
Taillamps 290
Text Telephone (TTY) Users 372
Theft-Deterrent Systems 48
Immobilizer 47
Time 114
Tires 300
All-Season 301
Buying New Tires 315
Tires (cont'd)
Chains 320
Changing 329
Compact Spare 334
Designations 304
Different Size 317
If a Tire Goes Flat 320
Inspection 313
Pressure 307
Pressure Light 133
Pressure Monitor Operation . . 310
Pressure Monitor System 309
Rotation 314
Sealant and
Compressor Kit 322
Sealant and Compressor
Kit, Storing 328
Sidewall Labeling 302
Terminology and Definitions . . 305
Uniform Tire Quality
Grading 317
Wheel Alignment and Tire
Balance 319
Wheel Replacement 319
When It Is Time for New
Tires 315

Tires (cont'd)
Winter 301
Tow/Haul Mode 209
Tow/Haul Mode Light 131
Towing
Driving Characteristics 251
Equipment 256
General Information 251
Recreational Vehicle 339
Trailer 254
Trailer Sway Control (TSC) . . . 257
Vehicle 337
Traction
Control System (TCS)/
StabiliTrak Light 132
Off Light 132
Traction Control/Electronic
Stability Control 213
Trailer
Sway Control (TSC) 257
Towing 254
Transmission
Automatic 204
Fluid, Automatic 274
Transportation Program,
Courtesy 375
Trip Odometer 123
Turn and Lane-Change
Signals 155

U

Uniform Tire Quality Grading . . . 317
Universal Remote System 147
Operation 150
Programming 147
Using This Manual 2

V

Vehicle
Alarm System 46
Canadian Owners 2
Control 171
Design 170
Identification Number (VIN) . . . 365
Load Limits 181
Messages 141
Personalization 142
Remote Start 35
Security 46
Speed Messages 142
Towing 337
Vehicle Ahead Indicator 132
Vehicle Care
Storing the Tire Sealant
and Compressor Kit 328
Tire Pressure 307
Vehicle Data Recording and
Privacy 381
Ventilation, Air 165
Visors 52

W

Wait to Start Light 133
Warning
Brake System Light 129
Caution and Danger 3
Lane Departure (LDW) 234
Warning Lights, Gauges, and
Indicators 118
Warnings
Hazard Flashers 154
Washer Fluid 282
Water in Fuel 243
What Fuel to Use in Canada
and Mexico 240
What Fuel to Use in the U.S. . . . 239
Wheels
Alignment and Tire Balance . . 319
Different Size 317

Wheels (cont'd)
Replacement 319
When It Is Time for New
Tires 315
Where to Put the Restraint 94
Wi-Fi 386
Windows 50
Power 51
Windshield
Replacement 287
Wiper/Washer 111
Winter
Driving 179
Winter Tires 301
Wiper Blade Replacement 286
Wipers
Rear Washer 112
Wireless Charging 115

WARNING

Operating, servicing and maintaining a passenger vehicle or off-road vehicle can expose you to chemicals including engine exhaust, carbon monoxide, phthalates, and lead, which are known to the State of California to cause cancer and birth defects or other reproductive harm. To minimize exposure, avoid breathing exhaust, do not idle engine except as necessary, service your vehicle in a well-ventilated area and wear gloves or wash your hands frequently when servicing your vehicle. For more information go to www.P65Warnings.ca.gov/passenger-vehicle.

U.S. Only

23194369 B